AFFDL-TR-79-3032
Volume I

THE USAF STABILITY AND CONTROL DIGITAL DATCOM
Volume I, Users Manual

MCDONNELL DOUGLAS ASTRONAUTICS COMPANY - ST. LOUIS DIVISION
ST. LOUIS, MISSOURI 63166

APRIL 1979

TECHNICAL REPORT AFFDL-TR-79-3032, Volume I
Final Report for Period August 1977 — November 1978

AIR FORCE FLIGHT DYNAMICS LABORATORY
AIR FORCE WRIGHT AERONAUTICAL LABORATORIES
AIR FORCE SYSTEMS COMMAND
WRIGHT-PATTERSON AIR FORCE BASE, OHIO 45433

NOTICE

When government drawings, specifications, or other data are used for any purpose other than in connection with a definitely related government procurement operation, the United States Government thereby incurs no responsibility nor any obligation whatsoever; and the fact that the government may have formulated, furnished, or in any way supplied the said drawings, specifications, or other data, is not to be regarded by implication or otherwise as in any manner licensing the holder or any other person or corporation, or conveying any rights or permission to manufacture, use, or sell any patented invention that may in any way be related thereto.

This report has been reviewed by the Office of Public Affairs (ASD/PA) and is releasable to the National Technical Information Service (NTIS). At NTIS, it will be available to the general public, including foreign nations.

This technical report has been reviewed and is approved for publication.

Bernard F. Niehaus

B. F. NIEHAUS

Vernon O. Hoehne

V. O. HOEHNE
Acting Branch Chief
Control Dynamics Branch
Flight Control Division

FOR THE COMMANDER

M. A. Ostgaard

MORRIS A. OSTGAARD
Acting Chief
Flight Control Division

If your address has changed, if you wish to be removed from our mailing list, or if the addressee is no longer employed by your organization please notify **AFWAL/FIGC**, *W-PAFB, OH 45433 to help us maintain a current mailing list.*

Copies of this report should not be returned unless return is required by security considerations, contractual obligations, or notice on a specific document.

AIR FORCE/56780/24 June 1980 — 860

UNCLASSIFIED

SECURITY CLASSIFICATION OF THIS PAGE (When Data Entered)

REPORT DOCUMENTATION PAGE		READ INSTRUCTIONS BEFORE COMPLETING FORM
1. REPORT NUMBER AFFDL-TR-79-3032, VOLUME I	2. GOVT ACCESSION NO.	3. RECIPIENT'S CATALOG NUMBER
4. TITLE (and Subtitle) THE USAF STABILITY AND CONTROL DIGITAL DATCOM Volume I, Users Manual		5. TYPE OF REPORT & PERIOD COVERED August 1977 to November 1978 6. PERFORMING ORG. REPORT NUMBER
7. AUTHOR(s) John E. Williams and Steven R. Vukelich		8. CONTRACT OR GRANT NUMBER(s) F33615-77-C-3073
9. PERFORMING ORGANIZATION NAME AND ADDRESS McDonnell Douglas Astronautics Company-St. Louis P.O. Box 516 St. Louis, Missouri 63166		10. PROGRAM ELEMENT, PROJECT, TASK AREA & WORK UNIT NUMBERS AFFDL Project No. 8219 Task 82190115
11. CONTROLLING OFFICE NAME AND ADDRESS Air Force Flight Dynamics Lab (FGC) Wright-Patterson Air Force Base, Ohio 45433		12. REPORT DATE April 1979 13. NUMBER OF PAGES 317
14. MONITORING AGENCY NAME & ADDRESS(if different from Controlling Office)		15. SECURITY CLASS. (of this report) Unclassified 15a. DECLASSIFICATION/DOWNGRADING SCHEDULE

16. DISTRIBUTION STATEMENT (of this Report)

Approved for public release; distribution unlimited.

17. DISTRIBUTION STATEMENT (of the abstract entered in Block 20, if different from Report)

18. SUPPLEMENTARY NOTES

None.

19. KEY WORDS (Continue on reverse side if necessary and identify by block number)

USAF DATCOM
Aerodynamic Stability
High Lift and Control
Computer Program
Fortran

20. ABSTRACT (Continue on reverse side if necessary and identify by block number)

This report describes a digital computer program that calculates static stability, high lift and control, and dynamic derivative characteristics using the methods contained in the USAF Stability and Control Datcom (revised April 1976). Configuration geometry, attitude, and Mach range capabilities are consistent with those accommodated by the Datcom. The program contains a trim option that computes control deflections and aerodynamic increments for vehicle trim at subsonic Mach numbers. Volume I is the user's manual and presents

DD FORM 1 JAN 73 1473 EDITION OF 1 NOV 65 IS OBSOLETE

UNCLASSIFIED

SECURITY CLASSIFICATION OF THIS PAGE (When Data Entered)

program capabilities, input and output characteristics, and example problems. Volume II describes program implementation of Datcom methods. Volume III discusses a separate plot module for Digital Datcom.

The program is written in ANSI Fortran IV. The primary deviations from standard Fortran are Namelist input and certain statements required by the CDC compilers. Core requirements have been minimized by data packing and the use of overlays.

User oriented features of the program include minimized input requirements, input error analysis, and various options for application flexibility.

FOREWORD

This report, "The USAF Stability and Control Digital Datcom," describes the computer program that calculates static stability, high lift and control, and dynamic derivative characteristics using the methods contained in Sections 4 through 7 of the USAF Stability and Control Datcom (revised April 1976). The report consists of the following three volumes:

- Volume I, Users Manual
- Volume II, Implementation of Datcom Methods
- Volume III, Plot Module

A complete listing of the program is provided as a microfiche supplement.

This work was performed by the McDonnell Douglas Astronautics Company, Box 516, St. Louis, MO 63166, under contract number F33615-77-C-3073 with the United States Air Force Systems Command, Wright-Patterson Air Force Base, OH. The subject contract was initiated under Air Force Flight Dynamics Laboratory Project 8219, Task 82190115 on 15 August 1977 and was effectively concluded in November 1978. This report supersedes AFFDL TR-73-23 produced under contract F33615-72-C-1067, which automated Sections 4 and 5 of the USAF Stability and Control Datcom; AFFDL TR-74-68 produced under contract F33615-73-C-3058 which extended the program to include Datcom Sections 6 and 7 and a trim option; and AFFDL-TR-76-45 that incorporated Datcom revisions and user oriented options under contract F33615-75-C-3043. The recent activity generated a plot module, updated methods to incorporate the 1976 Datcom revisions, and provide additional user oriented features. These contracts, in total, reflect a systematic approach to Datcom automation which commenced in February 1972. Mr. J. E. Jenkins, AFFDL FGC, was the Air Force Project Engineer for the previous three contracts and Mr. B. F. Niehaus acted in this capacity for the current contract. The authors wish to thank Mr. Niehaus for his assistance, particularly in the areas of computer program formulation, implementation, and verification. A list of the Digital Datcom Principal Investigators and individuals who made significant contributions to the development of this program is provided on the following page.

Requests for copies of the computer program should be directed to the Air Force Flight Dynamics Laboratory (FGC). Copies of this report can be obtained from the National Technical Information Service (NTIS).

This report was submitted in April 1979.

PRINCIPAL INVESTIGATORS

J. E. Williams	(1975 - Present)
S. C. Murray	(1973 - 1975)
G. J. Mehlick	(1972 - 1973)
T. B. Sellers	(1972 - 1972)

CONTRIBUTORS

E. W. Ellison	(Datcom Methods Interpretation)
R. D. Finck	
G. S. Washburn	(Program Structure and Coding)

TABLE OF CONTENTS

TABLE OF CONTENTS (Continued)

LIST OF ILLUSTRATIONS

LIST OF ILLUSTRATIONS (Continued)

LIST OF TABLES

SECTION 1

INTRODUCTION

In preliminary design operations, rapid and economical estimations of aerodynamic stability and control characteristics are frequently required. The extensive application of complex automated estimation procedures is often prohibitive in terms of time and computer costs in such an environment. Similar inefficiencies accompany hand-calculation procedures, which can require expenditures of significant man-hours, particularly if configuration trade studies are involved, or if estimates are desired over a range of flight conditions. The fundamental purpose of the USAF Stability and Control Datcom is to provide a systematic summary of methods for estimating stability and control characteristics in preliminary design applications. Consistent with this philosophy, the development of the Digital Datcom computer program is an approach to provide rapid and economical estimation of aerodynamic stability and control characteristics.

Digital Datcom calculates static stability, high-lift and control device, and dynamic-derivative characteristics using the methods contained in Sections 4 through 7 of Datcom. The computer program also offers a trim option that computes control deflections and aerodynamic data for vehicle trim at subsonic Mach numbers.

The program has been developed on a modular basis as illustrated in Figure 1. These modules correspond to the primary building blocks referenced in the program executive. The modular approach was used because it simplifies program development, testing, and modification or expansion.

This report is the User's Manual for the USAF Stability and Control Digital Datcom. Potential users are directed to Section 2 for an overview of program capabilities. Section 3 provides input definitions, with basic configuration geometry modeling techniques presented in Section 4. Analyses of special configurations are treated in Section 5. Section 6 discusses the available output data. The appendices discuss namelist coding rules, airfoil section characteristic estimation methods with supplemental data, and a list of geometric and aerodynamic variables available as supplemental output. A self-contained user's kit is included to aid the user in setting up inputs to the program.

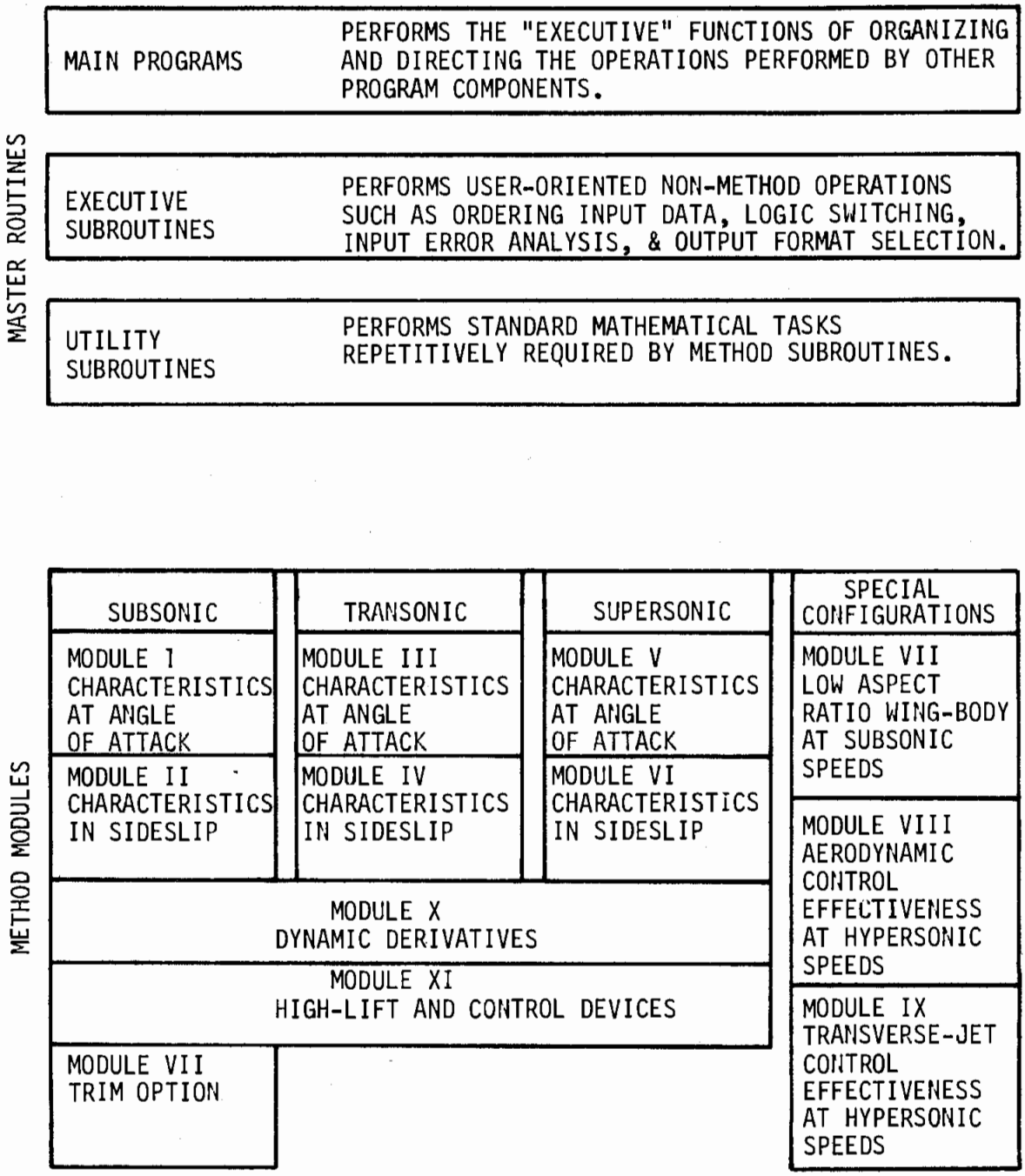

FIGURE 1 DIGITAL DATCOM MODULES

Even though the development of Digital Datcom was pursued with the sole objective of translating the Datcom methods into an efficient, user-oriented computer program, differences between Datcom and Digital Datcom do exist. Such is the primary subject of Volume II, Implementation of Datcom Methods, which contains the correspondence between Datcom methods and program formulation. This volume also defines the program implementation requirements. The listing of the computer program is contained on microfiche as a supplement to this report. Modifications, extensions, and limitations of Datcom methods as incorporated in Digital Datcom are discussed throughout the report. Volume III discusses a separate plot module for Digital Datcom.

Users should refer to Datcom for the limitations of methods involved. However, potential users are forewarned that Datcom drag methods are not recommended for performance. Where more than one Datcom method exists, Volume II indicates which method or methods are employed in Digital Datcom.

The computer program is written in the Fortran IV language for the CDC CYBER 175. Through the use of overlay and data packing techniques, the core requirement is 67,000 octal words for execution on the CYBER 175 with the NOS operating system using the FTN compiler. Central processor time for a case executed on the NOS system depends on the type of configuration, number of flight conditions, and program options selected. Usual requirements are on the order of one to two seconds per Mach number.

Direct all program inquiries to AFFDL FGC, Wright-Patterson Air Force Base, OH 45433; phone (513) 255-4315.

3, 4 blank

SECTION 2

PROGRAM CAPABILITIES

This section has been prepared to assist the potential user in his decision process concerning the applicability of the USAF Stability and Control Digital Datcom to his particular requirements. For specific questions dealing with method validity and limitations, the user is strongly encouraged to refer to the USAF Stability and Control Datcom document. Much of the flexibility inherent in the Datcom methods has been retained by allowing the user to substitute experimental or refined analytical data at intermediate computation levels. Extrapolations beyond the normal range of the Datcom methods are provided by the program; however, each time an extrapolation is employed, a message is printed which identifies the point at which the extrapolation is made and the results of the extrapolation. Supplemental output is available via the "dump" and "partial output" options which give the user access to key intermediate parameters to aid verification or adjustment of computations. The following paragraphs discuss primary program capabilities as well as selected qualifiers and limitations.

2.1 ADDRESSABLE CONFIGURATIONS

In general, Datcom treats the traditional body-wing-tail geometries including control effectiveness for a variety of high-lift/control devices. High-lift/control output is generally in terms of the incremental effects due to deflection. The user must integrate these incremental effects with the "basic" configuration output. Certain Datcom methods applicable to reentry type vehicles are also available. Therefore, the Digital Datcom addressable geometries include the "basic" traditional aircraft concepts (including canard configurations), and unique geometries which are identified as "special" configurations. Table 1 summarizes the addressable configurations accommodated by the program.

2.2 BASIC CONFIGURATION DATA

The capabilities discussed below apply to basic configurations, i.e., traditional body-wing-tail concepts. A detailed summary of output as a function of configuration and speed regime is presented in Table 2. Note that transonic output can be expanded through the use of data substitution (Sections 3.2 and 4.5). Typical output for these configurations are presented in Section 6.

TABLE 1 ADDRESSABLE CONFIGURATIONS

CONFIGURATION	PROGRAM REMARKS
BODY	PRIMARILY BODIES OF REVOLUTION, OR CLOSE APPROXIMATIONS, ARE TREATED. TRANSONIC METHODS FOR MOST OF THE AERODYNAMIC DATA DO NOT EXIST. THE RECOMMENDED PROCEDURE REQUIRES FAIRING BETWEEN SUBSONIC AND SUPERSONIC DATA USING AVAILABLE DATA AS A GUIDE.
WING, HORIZONTAL TAIL	STRAIGHT TAPERED, CRANKED, OR DOUBLE DELTA PLANFORMS ARE TREATED. EFFECTS OF SWEEP, TAPER AND INCIDENCE ARE INCLUDED. LINEAR TWIST IS TREATED AT SUBSONIC MACH NUMBERS. DIHEDRAL EFFECTS ARE PRESENT IN THE LATERAL-DIRECTIONAL DATA.
BODY-WING, BODY-HORIZONTAL	LONGITUDINAL METHODS REFLECT ONLY A MIDWING POSITION. LATERAL-DIRECTIONAL SOLUTIONS CONSIDER HIGH- AND LOW-WING POSITIONS.
WING-BODY-TAIL	THE VARIOUS GEOMETRY COMBINATIONS ARE GIVEN IN TABLE 2. WING DOWNWASH METHODS ARE RESTRICTED TO STRAIGHT-TAPERED PLANFORMS. EFFECTS OF TWIN VERTICAL TAILS ARE INCLUDED IN THE STATIC LATERAL DIRECTIONAL DATA AT SUBSONIC MACH NUMBERS.
NON-STANDARD GEOMETRIES	NON-STANDARD CONFIGURATIONS ARE SIMULATED USING "BASIC" CONFIGURATION TECHNIQUES. STRAKES CAN BE RUN VIA A DOUBLE-DELTA WING. A BODY-CANARD-WING IS INPUT AS A WING-BODY-HORIZONTAL TAIL. THE FORWARD LIFTING SURFACE IS INPUT AS A WING AND THE AFT SURFACE AS A HORIZONTAL TAIL.
SPECIAL CONFIGURATION	LOW ASPECT RATIO WING OR WING-BODY CONFIGURATIONS (LIFTING BODIES) ARE TREATED AT SUBSONIC SPEEDS. TWO-DIMENSIONAL FLAP AND TRANSVERSE JET EFFECTS ARE ALSO TREATED AT HYPERSONIC SPEEDS.

TABLE 2
AERODYNAMIC OUTPUT AS A FUNCTION OF CONFIGURATION AND SPEED REGIME [4]

● OUTPUT AVAILABLE
□ OUTPUT ONLY FOR CONFIGURATIONS WITH STRAIGHT TAPERED SURFACES
▲ OUTPUT ONLY WITH EXPERIMENTAL DATA INPUT

CONFIGURATION	SPEED REGIME	STATIC AERODYNAMIC CHARACTERISTIC OUTPUT														DYNAMIC STABILITY OUTPUT								
		C_{D_0}	C_D	C_L	C_m	C_N	C_A	C_{L_α}	C_{m_α}	C_{Y_β}	C_{n_β}	C_{l_β}	q'/q	ϵ	$\frac{d\epsilon}{d\alpha}$	C_{L_q}	C_{m_q}	$C_{L_{\dot\alpha}}$	$C_{m_{\dot\alpha}}$	C_{l_p}	C_{Y_p}	C_{n_p}	C_{n_r}	C_{l_r}
BODY	SUBSONIC	●	●	●	●	●	●	●	●	●	●	●				●	●	●	●					●
	[5] TRANSONIC	●	●					●	●	●	●	●				●	●	●	●					●
	SUPERSONIC	●	●	●	●	●	●	●	●	●	●	●				●	●	●	●					●
	HYPERSONIC	●	●	●	●	●	●	●	●	●	●	●				●	●	●	●					●
WING	SUBSONIC	●	●	●	●	●	●	●	●	●	●	●				●	●	●	●	●	●	●	●	●
	TRANSONIC	□	▲	▲		▲	▲	□	□			▲				□	□	□	□					
	SUPERSONIC	●	□	□		□	□	●	●	□	□	□				□	□	●	●	●	●			
	HYPERSONIC	●	□	□		□	□	●	●	□	□	□												
HORIZONTAL TAIL	SUBSONIC	●	●	●	●	●	●	●	●	●	●	●				●	●	●	●	●	●	●	●	
	TRANSONIC	□	▲	▲		▲	▲	□	□			▲				□	□	□	□					
	SUPERSONIC	●	□	□		□	□	●	●	□	□	□				□	□	●	●	●	●	●		
	HYPERSONIC	●	□	□		□	□	●	●	□	□	□												
VERTICAL TAIL OR VENTRAL FIN	SUBSONIC	●	●	●	●	●	●	●	●	●	●	●				●	●	●	●	●	●	●	●	
	TRANSONIC	□						●	●							●	●	●	●					
	[3] SUPERSONIC	●		●	●	●	●	●	●	□	□	□				●	●	●	●					
	HYPERSONIC	●		●	●	●	●	●	●	□	□	□												
WING-BODY	[1] SUBSONIC	●	●	●	●	●	●	●	●	●	●	●				●	●	●	●	●	●	●	●	●
	TRANSONIC	□	▲	●		▲	▲	□	□	●	●	●				□	□	□	□					
	SUPERSONIC	●	□	□		□	□	●	●	●	●	□				●	●	●	□	●	●			
	HYPERSONIC	●	□	□		□	□	●	●	●	●	□												
HORIZONTAL TAIL-BODY	SUBSONIC	●	●	●	●	●	●	●	●	●	●	●				●	●	●	●					
	TRANSONIC	□	●	□		▲	▲	□	□	●	●	●				□	□	□	□					
	SUPERSONIC	●	□	□		□	□	●	●	●	●	□				●	●	●	□					
	HYPERSONIC	●	□	□		□	□	●	●	●	●	□												
VERTICAL TAIL-VENTRAL FIN-BODY	SUBSONIC	●	●	●	●	●	●	●	●	●	●	●				●	●	●	●					
	TRANSONIC	□	□	▲		▲	▲	●	●							●	●	●	●					
	[3] SUPERSONIC	●	●	●	●	●	●	●	●	□	□	□				●	●	●	●					
	HYPERSONIC	●	●	●		●	●	●	●	□	□	□												
WING-BODY HORIZONTAL TAIL	[1] SUBSONIC	□	□	□	□	□	□	□	□	●	●	●	□	□	□	□	□	□	□	□	□	□	□	
	TRANSONIC	□	▲	▲		▲	▲	□	□				□	□	□	□	□	□	□					
	SUPERSONIC	□	□	□		□	□	□	□	●	●	□	□	□	□	□	□	□	□	□	□			
	HYPERSONIC	□	□	□		□	□	□	□	●	●	□	□	□	□									
WING-BODY-VERTICAL TAIL-VENTRAL FIN	[1] SUBSONIC	●	●	●	●	●	●	●	●	●	●	●				●	●	●	●	●	●	●	●	
	[2] TRANSONIC	□	▲	□		▲	▲	□	□	●	●					□	□	□	□					
	[3] SUPERSONIC	●	□	□		□	□	●	●	●	●	□				●	●	●	●					
	HYPERSONIC	●	□	□		□	□	●	●	●	●	□												
WING-BODY-HORIZONTAL TAIL-VERTICAL TAIL-VENTRAL FIN	[1] SUBSONIC	□	□	□	□	□	□	□	□	●	●	●	□	□	□	□	□	□	□	□	□	□	□	□
	TRANSONIC	□	▲	▲		▲	▲	□	□				□	□	□	□	□	□	□					
	[3] SUPERSONIC	□	□	□		□	□	□	□	●	●	□	□	□	□	□	□	□	□					
	HYPERSONIC	□	□	□		□	□	□	□	●	●	□	□	□	□									

[1] THE EFFECTS OF JET POWER, PROPELLER POWER, AND GROUND PROXIMITY MAY BE OBTAINED FOR THESE CONFIGURATIONS IF THE REQUIRED NAMELISTS ARE INPUT, THE EFFECTS OF POWER AND GROUND EFFECTS ARE INCLUDED ONLY IN THE SUBSONIC LONGITUDINAL STABILITY RESULTS.

[2] DYNAMIC STABILITY RESULTS ARE THE SAME AS WING-BODY

[3] TWIN VERTICAL TAIL RESULTS MAY BE OBTAINED FOR THESE CONFIGURATIONS IF THE REQUIRED NAMELIST IS INPUT. THESE EFFECTS ARE INCLUDED ONLY IN THE SUBSONIC LATERAL STABILITY DATA.

[4] REFER TO DATCOM HANDBOOK FOR METHOD LIMITATIONS IF OUTPUT IS NOT OBTAINED

[5] AVAILABLE ONLY IN COMBINATION WITH A WING OR TAIL

2.2.1 Static Stability Characteristics

The longitudinal and lateral-directional stability characteristics provided by the Datcom and the Digital Datcom are in the stability-axis system. Body-axis normal-force and axial-force coefficients are also included in the output for convenience of the user. For those speed regimes and configurations where Datcom methods are available, the Digital Datcom output provides the longitudinal coefficients C_D, C_L, C_m, C_N, and C_A, and the derivatives C_{L_α}, C_{m_α}, C_{Y_β}, C_{n_β}, and C_{ℓ_β}. Output for configurations with a wing and horizontal tail also includes downwash and the local dynamic-pressure ratio in the region of the tail. Subsonic data that include propeller power, jet power, or ground effects are also available. Power and ground effects are limited to the longitudinal aerodynamic characteristics.

Users are cautioned that the Datcom does not rigorously treat aerodynamics in the transonic speed regime, and a fairing between subsonic and supersonic solutions is often the recommended procedure. Digital Datcom uses linear and nonlinear fairings through specific points; however, the user may find another fairing more acceptable. The details of these fairing techniques are discussed in Volume II, Section 4. The partial output option, discussed in Section 3.5, permits the user to obtain the information necessary for transonic fairings. The experimental data input option allows the user to revise the transonic fairings on configuration components, perform parametric analyses on test configurations, and apply better method results (or data) for configuration build-up.

Datcom body aerodynamic characteristics can be obtained at all Mach numbers only for bodies of revolution. Digital Datcom can also provide subsonic longitudinal data for cambered bodies of arbitrary cross section as shown in Figure 6. The cambered body capability is restricted to subsonic longitudinal-stability solutions.

Straight-tapered and nonstraight-tapered wings including effects of sweep, taper, and incidence can be treated by the program. The effect of linear twist can be treated at subsonic Mach numbers. Dihedral influences are included in lateral-directional stability derivatives and wing wake location used in the calculation of longitudinal data. Airfoil section characteristics are a required input, although most of these characteristics may be generated using the Airfoil Section Module (Appendix B). Users are

advised to be mindful of section characteristics which are sensitive to Reynolds number, particularly in cases where very low Reynolds number estimates are of interest. A typical example would be pretest estimates for small, laminar flow wind tunnels where Reynolds numbers on the order of 100,000 are common.

Users should be aware that the Datcom and Digital Datcom employ turbulent skin friction methods in the computation of friction drag values. Estimates for cases involving significant wetted areas in laminar flow will require adjustment by the user.

Computations of wing-body longitudinal characteristics assume, in many cases, that the configuration is of the mid-wing type. Lateral-directional analyses do account for other wing locations. Users should consult the Datcom for specific details.

Wing-body-tail configurations which may be addressed are shown in Table 2. These capabilities permit the user to analyze complete configurations, including canard and conventional aircraft arrangements. Component aerodynamic contributions and configuration build-up data are available through the use of the "BUILD" option described in Section 3.5. Using this option, the user can isolate component aerodynamic contributions in a similar fashion to break down data from a wind tunnel where such information is of value in obtaining an overall understanding of a specific configuration.

Twin vertical panels can be placed either on the wing or horizontal tail. Analysis can be performed with both twin vertical tail panels and a conventional vertical tail specified though interference effects between the three panels is not computed. The influence of twin vertical tails is included only in the lateral-directional stability characteristics at subsonic speeds.

2.2.2 Dynamic Stability Characteristics

The pitch, acceleration, roll and yaw derivatives of C_{L_q}, C_{m_q}, $C_{L_{\dot{\alpha}}}$, $C_{m_{\dot{\alpha}}}$, C_{ℓ_p}, C_{Y_p}, C_{n_p}, C_{n_r}, and C_{ℓ_r} are computed for each component and the build-up configurations shown in Table 2. All limitations discussed in Section 7 of the USAF Stability and Control Datcom are applicable to Digital Datcom as well. The experimental data option of the program (Section 4.5) permits the user to substitute experimental data for key parameters involved in dynamic derivative solutions, such as body C_{L_α} and wing-body C_{L_α}. Any improvement in the accuracy of these key parameters will produce significant improvement in

TABLE 3 HIGH LIFT/CONTROL DEVICE OUTPUT

SPEED REGIME CODE 1 = Subsonic 2 = Transonic 3 = Supersonic

Control Device	ΔC_L*	ΔC_m	ΔC_{D_i}	$\Delta C_{L_{max}}$	$(C_{L_\alpha})_\delta$	$\Delta C_{D_{min}}$	C_{ℓ_W}	C_{n_W}	$C_{\ell_{HT}}$	C_{h_α}*	C_{h_δ}*
Jet Flaps											
Pure Jet Flap	1	1		1	1						
Jet Flap & Mech. Flap	1	1		1	1						
IBF	1	1		1	1						
EBF	1	1		1	1						
Flaps											
Plain	1 2 3	1 3	1	1		1				1 3	1 3
Single Slotted	1 2	1	1	1	1 2 3	1					
Fowler Slotted	1 2	1	1	1	1 2 3						
Double Slotted	1 2	1	1	1	1 2 3					1	1
Split	1 2	1	1								
Leading Edge	1 2	1	1								
Krueger	1 2	1			1 2 3						
Slats											
Leading Edge	1 2	1			1 2 3						
Spoilers											
Plug							1 2 3	1 3			
Flap							1 2 3	1 3			
Slotted							1 2	1			
Differential δ											
Horizontal Tails									1 2 3		
Wing Ailerons							1 2 3	1 2 3			

Notes: *In addition to straight-tapered planforms, output also available on non-straight-tapered planforms (e.g., double delta).

Ailerons are identified as plain flaps in program.

IBF - Internally blown flap EBF - Externally blown flap

W - Wing HT - Horizontal tail

the dynamic stability estimates. Use of experimental data substitution for this purpose is strongly recommended.

2.2.3 High-Lift and Control Characteristics

High-lift devices that can be analyzed by the Datcom methods include jet flaps, split, plain, single-slotted, double-slotted, fowler, and leading edge flaps and slats. Control devices, such as trailing-edge flap-type controls and spoilers, can also be treated. In general terms, the program provides the incremental effects of high lift or control device deflections at zero angle of attack.

The majority of the high-lift-device methods deal with subsonic lift, drag, and pitching-moment effects with flap deflection. General capabilities for jet flaps, symmetrically deflected high-lift devices, or trailing-edge control devices include lift, moment, and maximum-lift increments along with drag-polar increments and hinge-moment derivatives. For translating devices the lift-curve slope is also computed. Asymmetrical deflection of wing control devices can be analyzed for rolling and yawing effectiveness. Rolling effectiveness may be obtained for all-movable differentially-deflected horizontal stabilizers. The speed regimes where these capabilities exist are shown in Table 3.

Control modes employing all-movable wing or tail surfaces can also be addressed with the program. This is accomplished by executing multiple cases with a variety of panel incidence angles.

2.2.4 Trim Option

Trim data can be calculated at subsonic speeds. Digital Datcom manipulates computed stability and control characteristics to provide trim output (static $C_m = 0.0$). The trim option is available in two modes. One mode treats configurations with a trim control device on the wing or horizontal tail. Output is presented as a function of angle of attack and consists of control deflection angles required to trim and the associated longitudinal aerodynamic characteristics shown in Table 3. The second mode treats conventional wing-body-tail configurations where the horizontal-tail is all-movable or "flying." In this case, output as a function of angle of attack consists of horizontal-stabilizer deflection (or incidence) angle required to trim; untrimmed stabilizer C_L, C_D, C_m, and hinge-moment coefficients; trimmed stabilizer C_L, C_D, and hinge moment coefficients; and total wing-body-tail C_L

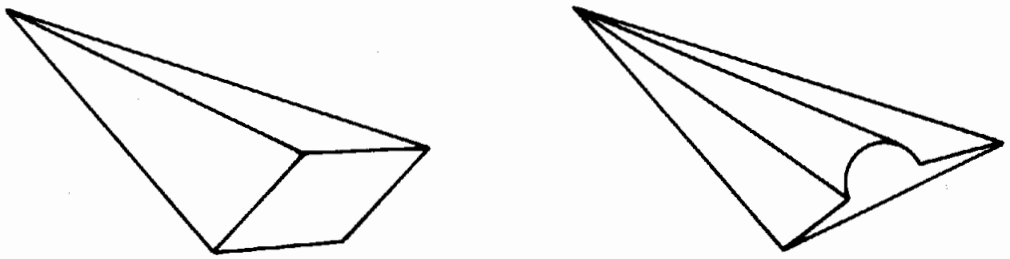

LOW ASPECT RATIO WINGS/WING BODY COMBINATIONS

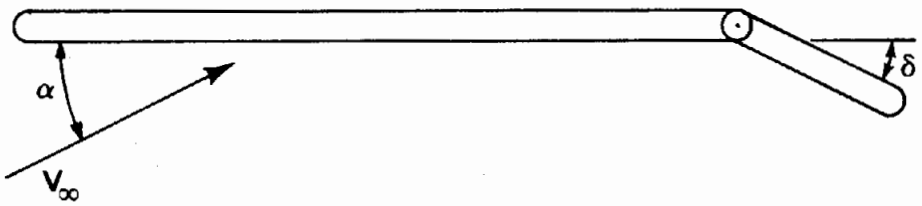

HYPERSONIC FLAP

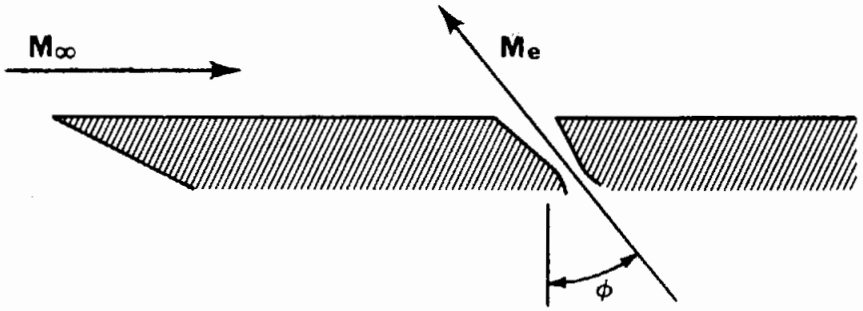

TRANSVERSE JET

FIGURE 2 SPECIAL CONFIGURATIONS

and C_D. Body-canard-tail configurations may be trimmed by calculating the stability characteristics at a variety of canard incidence angles and manually calculating the trim data. Treatment of a canard configuration is addressed in Table 1.

2.3 SPECIAL CONFIGURATION DATA

The capabilities discussed below apply to the three special configurations illustrated in Figure 2.

2.3.1 Low-Aspect-Ratio Wings and Wing-Body Combinations

Datcom provides methods which apply to lifting reentry vehicles at subsonic speeds. Digital Datcom output provides longitudinal coefficients C_D, C_L, C_m, C_N, and C_A and the derivatives C_{L_α}, C_{m_α}, C_{Y_β}, C_{n_β}, and C_{ℓ_β}.

2.3.2 Aerodynamic Control at Hypersonic Speeds

The USAF Stability and Control Datcom contains some special control methods for high-speed vehicles. These include hypersonic flap methods which are incorported into Digital Datcom. The flap methods are restricted to Mach numbers greater than 5, angles of attack between zero and 20 degrees and deflections into the wind. A two-dimensional flow field is determined and oblique shock relations are used to describe the flow field.

Data output from the hypersonic control-flap methods are incremental normal- and axial-force coefficients, associated hinge moments, and center-of-pressure location. These data are found from the local pressure distributions on the flap and in regions forward of the flap. The analysis includes the effects of flow separation due to windward flap deflection by providing estimates for separation induced-pressures forward of the flap and reattachment on the flap. Users may specify laminar or turbulent boundary layers.

2.3.3 Transverse-Jet Control Effectiveness

Datcom provides a procedure for preliminary sizing of a two-dimensional transverse-jet control system in hypersonic flow, assuming that the nozzle is located at the aft end of the surface. The method evaluates the interaction of the transverse jet with the local flow field. A favorable interaction will produce amplification forces that increase control effectiveness.

The Datcom method is restricted to control jets located on windward surfaces in a Mach number range of 2 to 20. In addition, the method is invalid for altitudes where mean free paths approach the jet-width dimension.

The transverse control jet method requires a user-specified time history of local flow parameters and control force required to trim or maneuver. With these data, the minimum jet plenum pressure is then employed to calculate the nozzle throat diameter and the jet plenum pressure and propellant weight requirements to trim or maneuver the vehicle.

2.4 OPERATIONAL CONSIDERATIONS

There are several operational considerations the user needs to understand in order to take maximum advantage of Digital Datcom.

2.4.1 Flight Condition Control

Digital Datcom requires Mach number and Reynolds number to define the flight conditions. This requirement can be satisfied by defining combinations of Mach number, velocity, Reynolds number, altitude, and pressure and temperature. The input options for speed reference and atmospheric conditions that satisfy the requirement are given in Figure 3. The speed reference is input as either Mach number or velocity, and the atmospheric conditions as either altitude or freestream pressure and temperature. The speed reference and atmospheric conditions are then used to calculate Reynolds number.

The program may loop on speed reference and atmospheric conditions three different ways, as given by the variable LØØP in Figure 3. In this discussion, and in Figure 3, the speed reference is referred to as Mach number, and atmospheric conditions as altitude. The three options for program looping on Mach number and altitude are listed and discussed below.

- LØØP = 1 - Vary Mach and altitude together. The program executes at the first Mach number and first altitude, the second Mach number and second altitude, and continues for all the flight conditions. In the input data, NMACH must equal NALT and NMACH flight conditions are executed. This option should be selected when the Reynolds number is input, and must be selected when atmospheric conditions are not input.
- LØØP = 2 - Vary Mach number at fixed altitude. The program executes using the first altitude and cycles through each Mach number in the input list, the second altitude and cycles through each Mach number, and continues until each altitude has been selected. Atmospheric conditions must be input for this option and NMACH times NALT flight conditions are executed.

- LØØP = 3 - Vary altitude at fixed Mach number. The program executes using the first Mach number and cycles through each altitude in the input list, the second Mach number and cycles through each altitude, and continues until each Mach number has been selected. Atmospheric conditions must be input for this option and NMACH times NALT flight conditions are executed.

2.4.2 Mach Regimes

Aerodynamic stability methods are defined in Datcom as a function of vehicle configuration and Mach regime. Digital Datcom logic determines the configuration being analyzed by identifying the particular input namelists that are present within a case (see Section 3). The Mach regime is nominally determined according to the following criteria:

Mach Number (M)	Mach Regime
$M \leq 0.6$	Subsonic
$0.6 < M < 1.4$	Transonic
$M \geq 1.4$	Supersonic
$M \geq 1.4$ and the hypersonic flag is set (see Figure 3)	Hypersonic

These limits were selected to conform with most Datcom methods. However, some methods are valid for a larger Mach number range. Some subsonic methods are valid up to a Mach number of 0.7 or 0.8. The user has the option to increase the subsonic Mach number limit using the variable STMACH described in Section 3.2. The program will permit this variable to be in the range: $0.6 \leq STMACH \leq 0.99$. In the same fashion, the supersonic Mach limit can be reduced using the variable TSMACH. The program will permit this variable to be in the range: $1.01 \leq TSMACH \leq 1.40$. The program will default to the limits of each variable if the range is exceeded. The Mach regimes are then defined as follows:

Mach Number (M)	Mach Regime
$M \leq STMACH$	Subsonic
$STMACH \leq M < TSMACH$	Transonic
$M \geq TSMACH$	Supersonic
$M \geq TSMACH$ and the hypersonic flag is set	Hypersonic

2.4.3 Input Diagnostics

There is an input diagnostic analysis module in Digital Datcom which scans all of the input data cards prior to program execution. A listing of all input data is given and any errors are flagged. It checks all namelist cards for correct namelist name and variable name spelling, checks the numerical inputs for syntax errors, and checks for legal control cards. The namelist and control cards are described in Section 3.

This module does not "fix up" input errors. It will, however, insert a namelist termination if it is not found. Digital Datcom will attempt to execute all cases as input by the user even if errors are detected.

2.4.4 Airfoil Section Module

The airfoil section module can be used to calculate the required geometric and aerodynamic input parameters for virtually any user defined airfoil section. This module substantially simplifies the user's input preparation. An airfoil section is defined by one of the following methods;

1. An airfoil section designation (for NACA, double wedge, circular arc or hexagonal airfoils),
2. Section upper and lower cartesian coordinates, or
3. Section mean line and thickness distribution.

The airfoil section module uses Weber's method (References 2 to 4) to calculate the inviscid aerodynamic characteristics. A viscous correction is applied to the section lift curve slope, c_{ℓ_α}. In addition a 5% correlation factor (suggested in Datcom, page 4.1.1.2-2) is applied to bring the results in line with experimental data. The airfoil section module methods are discussed in Appendix B.

The airfoil section is assumed to be parallel to the free stream. Skewed airfoils can be handled by supplying the section coordinates parallel to the free stream. The module will calculate the characteristics of any input airfoil, so the user must determine whether the results are applicable to his particular situation. Five general characteristics of the module should be noted:

1. For subsonic Mach numbers, the module computes the airfoil subsonic section characteristics and the results can be considered accurate for Mach numbers less than the crest critical Mach number. Near crest critical Mach number, flow mixing due to the upper surface

shock will make the boundary layer correction invalid. Compressibility corrections also become invalid. The module also computes the required geometric variables at all speeds, and for transonic and supersonic speeds these are the only required inputs. Mach equals zero data are always supplied.

2. Because of the nature of the solution, predictions for an airfoil whose maximum camber is greater than 6% of the chord will lose accuracy. Accuracy will also diminish when the maximum airfoil thickness exceeds approximately 12% of the chord, or large viscous interactions are present such as with supercritical airfoils.
3. When section cartesian coordinates or mean line and thickness distribution coordinates are specified, the user must adequately define the leading edge region to prevent surface curve fits that have an infinite slope. This can be accomplished by supplying section ordinates at nondimensional chord stations (X/C) of 0.0, .001, .002, and .003.
4. If the leading edge radius is not specified in the airfoil section input, the user must insure that the first and second coordinate points lie on the leading edge radius. For sharp nosed airfoils the user must specify a zero leading edge radius.
5. The computational algorithm can be sensitive to the "smoothness" of the input coordinates. Therefore, the user should insure that the input data contains no unintentional fluctuations. Considering that Datcom procedures are preliminary design methods, it is at least as important to provide smoothly varying coordinates as it is to accurately define the airfoil geometry.

2.4.5 Operational Limitations

Several operational limitations exist in Digital Datcom. These limitations are listed below without extensive discussion or justification. Some pertinent operational techniques are also listed.

- The forward lifting surface is always input as the wing and the aft lifting surface as the horizontal tail. This convention is used regardless of the nature of the configuration.
- Twin vertical tail methods are only applicable to lateral stability parameters at subsonic speeds.

- Airfoil section characteristics are assumed to be constant across the airfoil span, or an average for the panel. Inboard and outboard panels of cranked or double-delta planforms can have their individual panel leading edge radii and maximum thickness ratios specified separately.
- If airfoil sections are simultaneously specified for the same aerodynamic surface by an NACA designation and by coordinates, the coordinate information will take precedence.
- Jet and propeller power effects are only applied to the longitudinal stability parameters at subsonic speeds. Jet and propeller power effects cannot be applied simultaneously.
- Ground effect methods are only applicable to longitudinal stability parameters at subsonic speeds.
- Only one high lift or control device can be analyzed at a time. The effect of high lift and control devices on downwash is not calculated. The effects of multiple devices can be calculated by using the experimental data input option to supply the effects of one device and allowing Digital Datcom to calculate the incremental effects of the second device.
- Jet flaps are considered to be symmetrical high lift and control devices. The methods are only applicable to the longitudinal stability parameters at subsonic speeds.
- The program uses the input namelist names to define the configuration components to be synthesized. For example, the presence of namelist HTPLNF causes Digital Datcom to assume that the configuration has a horizontal tail.

Should Digital Datcom not provide output for those configurations for which output is expected, as shown in Table 2, limitations on the use of a Datcom method has probably been exceeded. In all cases users should consult the Datcom for method limitations.

SECTION 3

DEFINITION OF INPUTS

The Digital Datcom basic input data unit is the "case." A "case" is a set of input data that defines a configuration and its flight conditions. The case consists of inputs from up to four data groups.

- Group I inputs define the flight conditions and reference dimensions.
- Group II inputs specify the basic configuration geometry for conventional configurations, defining the body, wing and tail surfaces and their relative locations.
- Group III inputs specify additional configuration definition, such as engines, flaps, control tabs, ground effects or twin vertical panels. This input group also defines those "special" configurations that cannot be described using Group II inputs and include low aspect ratio wing and wing-body configurations, transverse jet control and hypersonic flaps.
- Group IV inputs control the execution of the case, or job for multiple cases, and allow the user to choose some of the special options, or to obtain extra output.

3.1 INPUT TECHNIQUE

Two techniques are generally available for introducing input data into a Fortran computer program: namelist and fixed format. Digital Datcom employs the namelist input technique for input Groups I, II and III since it is the most convenient and flexible for this application. Its use reduces the possibility of input errors and increases the utility of the program as follows:

- Variables within a namelist may be input in any order;
- Namelist variables are not restricted to particular card columns;
- Only required input variables need be included; and
- A variable may be included more than once within a namelist, but the last value to appear will be used.

Namelist rules used in the program and applicable to CDC and IBM systems are presented in Appendix A. The user should adhere to them when preparing inputs for Digital Datcom. To aid the user in complying with the general namelist rules, examples of both correct and incorrect namelist coding are included in Appendix A.

All namelist input variables (and program data blocks) are initialized "UNUSED" (1.0E-60 on CDC systems) prior to case execution. Therefore, omission of pertinent input variables may result in the "UNUSED" value to be used in calculations. However, the "UNUSED" value is often used as a switch for program control, so the user should not indiscriminately use dummy inputs.

All Digital Datcom numeric constants require a decimal point. The Fortran variable names that are implied INTEGERS (name begins with I, J, K, L, M, or N) are declared REAL and must be specified in either "E" or "F" format (X.XXXEYY or X.XXX).

Group IV inputs are the "case control cards." Though they are input in a fixed format, their use has the characteristic of a namelist, since (with the exception of the case termination card) they can be placed in any order or location in the input data. Descriptions and limitations of each of the available control cards are discussed in Section 3.5.

Table 4 defines the namelists and control cards that can be input to the program. Since not all namelist inputs are required to define a particular problem or configuration, those namelists required for various analyses are summarized in Tables 5 through 7. Use of these tables will save time in preparing namelist inputs for a specific problem.

The user has the option to specify the system of units to be used, English or Metric. Table 8 summarizes the systems available, and defines the case control card required to invoke each option. For clarity, the namelist variable description charts which follow have a column titled "Units" using the following nomenclature:

- ℓ denotes units of length; feet, inches, meters, or centimeters
- A denotes units of area; ft^2, in^2, m^2, or cm^2
- Deg denotes angular measure in degrees, or temperature in degrees Rankine or degrees Kelvin
- F denotes units of force; pounds or Newtons
- t denotes units of time; seconds.

Specific input parameters, geometric illustrations, and supporting data are provided throughout the report. To aid the user in reading these figures, the character "O" defines the number zero and the character "Ø" the fifteenth letter in the alphabet.

TABLE 4: DIGITAL DATCOM INPUT SUMMARY

GROUP I		GROUP II		GROUP III		GROUP IV	
NAMELIST INPUT						CONTROL CARD INPUT	
REFERENCE DATA DEFINITION		BASIC CONFIGURATION DEFINITION		ADDITIONAL/SPECIAL CONFIGURATION DEFINITION		JOB CONTROL CARDS	
NAMELIST NAME	PAGE DEFINED	NAMELIST NAME	PAGE DEFINED	NAMELIST NAME	PAGE DEFINED	CONTROL CARD NAME	PAGE DEFINED
FLTCØN	27	SYNTHS	33	PRØPWR	49	NAMELIST	73
ØPTINS	29	BØDY	35	JET PWR	51	SAVE	73
		WGPLNF	37	GRNDEF	53	DIM	73
		HTPLNF	37	TVTPAN	55	NEXT CASE	73
		VTPLNF	37	SYMFLP	57	TRIM	73
		VFPLNF	37	ASYFLP	61	DAMP	74
		WGSCHR	39	LARWB	63	NACA	74
		HTSCHR	39	TRNJET	65	CASEID	75
		VTSCHR	39	HYPEFF	67	DUMP	75
		VFSCHR	39	CØNTAB	69	DERIV	75
		EXPR – –	45			PART	77
						BUILD	77
						PLØT	77

TABLE 5
REQUIRED NAMELISTS FOR ANALYSIS OF BASIC CONFIGURATIONS

△1 USE OF THIS NAMELIST IS OPTIONAL EXCEPT WHEN CONFIGURATION IS BODY ALONE
△2 OPTIONAL, NOT REQUIRED
△3 OPTIONAL IF NACA CONTROL CARD IS USED

REQUIRED NAMELIST / BASIC CONFIGURATION*	FLTCØN	ØPTINS △1	SYNTHS	BØDY	WGPLNF	HTPLNF	VTPLNF	VFPLNF	WGSCHR △3	HTSCHR △3	VTSCHR △3	VFSCHR △3	EXPR-- △2
BODY ALONE	●	●	●	●									●
WING ALONE	●	●	●		●				●				●
HORIZONTAL TAIL ALONE	●	●	●			●				●			●
VERTICAL TAIL AND VENTRAL FIN ALONE	●	●	●				●	●			●	●	●
BODY–WING	●	●	●	●	●				●				●
BODY–HORIZONTAL	●	●	●	●		●				●			●
BODY–VERTICAL–VENTRAL	●	●	●	●			●	●			●	●	●
BODY–WING–HORIZONTAL	●	●	●	●	●	●			●	●			●
BODY–WING–VERTICAL–VENTRAL	●	●	●	●	●		●	●	●		●	●	●
BODY–WING–HORIZONTAL–VERTICAL–VENTRAL	●	●	●	●	●	●	●	●	●	●	●	●	●

*NOTE 1) MAXIMUM OF 2 LIFTING SURFACES (CANAROS OR CONVENTIONAL)
2) HIGH LIFT OR CONTROL DEVICES NEUTRAL
3) CLEAN BODIES E.G., NO DUCTS
4) NO EFFECT OF ENGINE POWER OR GROUND PROXIMITY

TABLE 6
NAMELISTS REQUIRED FOR ADDITIONAL ANALYSIS OF BASIC CONFIGURATIONS

ADDITIONAL ANALYSIS \ REQUIRED NAMELIST	PROPWR	JETPWR	GRNDEF	TVTPAN	SYMFLP	ASYFLP	APPLICABLE CONFIGURATIONS*						
	SUBSONIC ONLY						W	B+W	B+W+V	B+W+F	B+W+H	B+W+H +V	B+W+H +V+F
PROPELLER POWER	●							●	●	●	●	●	●
JET POWER		●						●	●	●	●	●	●
GROUND EFFECTS			●					●	●	●	●	●	●
TWIN VERTICAL TAIL				●				●	●	●	●	●	●
SYMMETRICAL FLAP ON WING					●		●	●	●	●			
SYMMETRICAL FLAP ON HORIZONTAL TAIL					●						●	●	●
ASYMMETRICAL FLAP ON WING						●	●	●	●	●			
ASYMMETRICAL FLAP ON HORIZONTAL TAIL						●					●	●	●
JET FLAP ON WING		●			●		●	●	●	●	●	●	●

*NOTE CONFIGURATION CODES: W – WING ALONE
B+W – WING–BODY
B+W+V – WING–BODY–VERTICAL
B+W+F – WING–BODY–VENTRAL FIN
B+W+H – WING–BODY–HORIZONTAL
B+W+H+V – WING–BODY–HORIZONTAL–VERTICAL
B+W+H+V+F – WING–BODY–HORIZONTAL–VERTICAL–VENTRAL FIN

TABLE 7
REQUIRED NAMELIST FOR ANALYSIS OF SPECIAL CONFIGURATIONS

SPECIAL CONFIGURATION \ REQUIRED NAMELIST	FLTCØN	LARWB	TRNJET	HYPEFF
LOW ASPECT RATIO WING & WING BODY (SUBSONIC)	●	●		
FLAT PLATE WITH TRANSVERSE JET (HYPERSONIC)	●		●	
FLAT PLATE WITH FLAP CONTROL (HYPERSONIC)	●			●

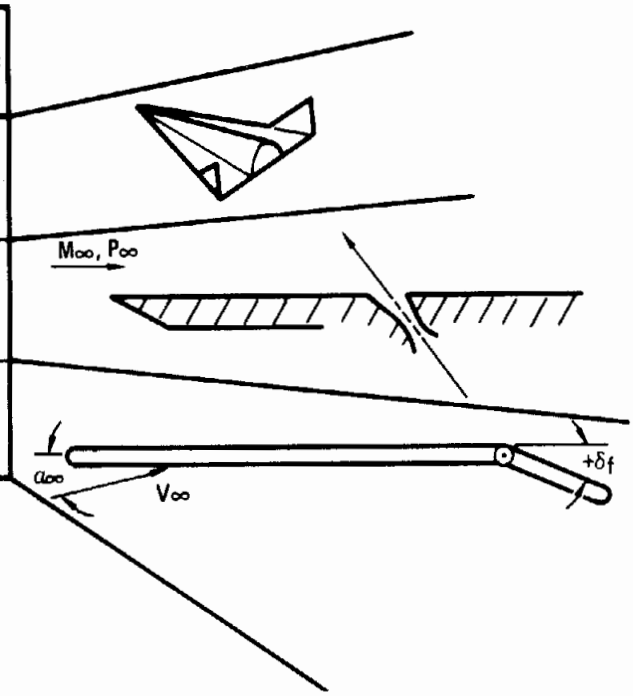

TABLE 8 INPUT UNIT OPTIONS

UNITS SYSTEM (LENGTH-FORCE-TIME, ℓ-F-T)	CONTROL CARD	GEOMETRY UNITS (ℓ)	SURFACE ROUGHNESS RØUGFC	PRESSURE P_∞ (F/A)	TEMPERATURE T_∞ (DEG)	REYNOLDS NUMBER PER UNIT LENGTH
FOOT-POUND-SECOND	DIM FT	FOOT	INCH	lb/ft^2	^oR	1/FT
INCH-POUND-SECOND	DIM IN	INCH	INCH	lb/in^2	^oR	1/FT
METER-NEWTON-SECOND	DIM M	METER	CM	N/M^2	^oK	1/M
CENTIMETER-NEWTON-SECOND	DIM CM	CM	CM	N/CM^2	^oK	1/M

THE DEFAULT SYSTEM OF UNITS IS THE FOOT-POUND-SECOND

3.2 GROUP I INPUT DATA

Namelist input data to define the case flight conditions and reference dimensions are shown in Figures 3 and 4.

Namelist FLTCØN, Figure 3, defines the case flight conditions. The user may opt to provide Mach number and Reynolds number per unit length for each case to be computed. In this case, input preparation requires that the user compute Reynolds number for each Mach number and altitude combination he desires to run. However, the program has a standard atmosphere model, which accurately simulates the 1962 Standard Atmosphere for geometric altitudes from -16,404 feet to 2,296,588 feet, that can be used to eliminate the Reynolds number input requirement and provides the user the option to employ Mach number or velocity as the flight speed reference. The user may specify Mach numbers (or velocities) and altitudes for each case and program computations will employ the atmosphere model to determine pressure, temperature, Reynolds number and other required parameters to support method applications.

Also incorporated is the provision for optional inputs of pressure and temperature by the user. The program will override the standard atmosphere and compute flow condition parameters consistent with the pressure and temperature inputs. This option will permit Digital Datcom applications such as wind tunnel model analyses at test section conditions.

The five input combinations which will satisfy the Mach number and Reynolds number requirements are summarized in Figure 3. If the NACA control card is used, the Reynolds number and Mach number must be defined using the variables RNNUB and MACH.

Other optional inputs include vehicle weight and flight path angle ("WT" and "GAMMA"). These parameters are of particular interest when using the Trim Option (Section 3.5). The trim flight conditions are output as an additional line of output with the trim data and the steady flight lift coefficient is output with the untrimmed data.

Use of the variable LØØP enables the user to run cases at fixed altitude with varying Mach number (or velocity), at fixed Mach number (or velocity) at varying altitudes, or varing speed and altitude together.

Nondimensional aerodynamic coefficients generated by Digital Datcom may be based on user-specified reference area and lengths. These reference

parameters are input via namelist ØPTINS, Figure 4. If the reference area is not specified, it is set equal to the theoretical planform area of the wing. This wing area includes the fuselage area subtended by the extension of the wing leading and trailing edges to the body center line. The longitudinal reference length, if not specified in ØPTINS, is set equal to the theoretical wing mean aerodynamic chord. The lateral reference length is set equal to the wing span when it is not user specified.

Reference parameters contained in ØPTINS must be specified for body-alone configurations since the default reference parameters are based on wing geometry. It is suggested that values near the magnitude of body maximum cross-sectional area be used for the reference area and body maximum diameter for the longitudinal and lateral reference lengths.

The output format generally provides at least three significant digits in the solution when user specified reference parameters are of the same order of magnitude as the default reference parameters. If the user specifies reference parameters that are orders of magnitude different from the wing area or aerodynamic chord, some output data can overflow the output format or print only zeros. This may happen in rare instances and would require readjustment of the reference parameters.

NAMELIST FLTCØN

VARIABLE NAME	ARRAY DIMENSION	DEFINITION	UNITS
NMACH	–	NUMBER OF MACH NUMBERS OR VELOCITIES TO BE RUN, MAXIMUM OF 20	–
MACH	20	VALUES OF FREESTREAM MACH NUMBER	–
VINF	20	VALUES OF FREESTREAM SPEED	ℓ/t
NALPHA	–	NUMBER OF ANGLES OF ATTACK TO BE RUN, MAXIMUM OF 20	–
ALSCHD	20	VALUES OF ANGLES OF ATTACK, TABULATED IN ASCENDING ORDER	DEG
RNNUB (2)	20	REYNOLDS NUMBER PER UNIT LENGTH, $\rho V/\mu$	$1/\ell$ (3)
NALT (6)	–	NUMBER OF ATMOSPHERIC CONDITIONS TO BE RUN, MAXIMUM OF 20	–
ALT (6)	20	VALUES OF GEOMETRIC ALTITUDES	ℓ
PINF (1) (6)	20	VALUES OF FREESTREAM STATIC PRESSURE	F/A
TINF (6)	20	VALUES OF FREESTREAM TEMPERATURE	DEG
HYPERS	–	= .TRUE. HYPERSONIC ANALYSIS AT ALL MACH NUMBERS $\geqslant$ 1.4	–
STMACH	–	UPPER LIMIT OF MACH NUMBERS FOR SUBSONIC ANALYSIS (0.6 $\leqslant$ STMACH $\leqslant$ 0.99). DEFAULT TO 0.6 IF NOT INPUT	–
TSMACH	–	LOWER LIMIT OF MACH NUMBERS FOR SUPERSONIC ANALYSIS (1.01 $\leqslant$ TSMACH $\leqslant$ 1.4). DEFAULT TO 1.4 IF NOT INPUT	–
TR	–	DRAG DUE TO LIFT TRANSITION FLAG, FOR REGRESSION ANALYSIS OF WING – BODY CONFIGURATIONS = 0.0 FOR NO TRANSITION, DEFAULT = 1.0 FOR TRANSITION STRIPS OR FULL SCALE FLIGHT.	–
WT	–	VEHICLE WEIGHT	F
GAMMA	–	FLIGHT PATH ANGLE	DEG
LØØP (7)	–	PROGRAM LOOPING CONTROL = 1 VARY ALTITUDE AND MACH TOGETHER, DEFAULT = 2 VARY MACH, AT FIXED ALTITUDE = 3 VARY ALTITUDE, AT FIXED MACH	–

FIGURE 3 INPUT FOR NAMELIST FLTCØN – FLIGHT CONDITIONS

INPUT OPTIONS TO SATISFY THE MACH NUMBER (7) AND REYNOLDS NUMBER INPUT REQUIREMENTS

USER INPUT	PROGRAM COMPUTES (5)
(4) MACH, RNNUB	
MACH, ALT	PINF, TINF, RNNUB
VINF, ALT	PINF, TINF, MACH, RNNUB
PINF, TINF, VINF	RNNUB, MACH
PINF, TINF, MACH	RNNUB, VINF

(1) REQUIRED FOR TRANSVERSE-JET CONTROL

(2) EACH ARRAY ELEMENT MUST CORRESPOND TO THE RESPECTIVE MACH NUMBER/FREESTREAM SPEED INPUT, USE LØØP = 1.

(3) UNITS ARE EITHER 1/FT OR 1/M AS DEFINED IN TABLE 8

(4) REQUIRED WHEN USING THE NACA CONTROL CARD

(5) USER INPUTS FOR THESE VARIABLES WILL TAKE PRECEDENCE

(6) ATMOSPHERIC CONDITIONS ARE INPUT AS EITHER ALTITUDE OR PRESSURE AND TEMPERATURE

(7) SEE SECTION 2.4.1, AND EXAMPLE PROBLEM 2 IN SECTION 7

NAMELIST ØPTINS

VARIABLE NAME	ARRAY DIMENSION	DEFINITION	UNITS
RØUGFC	–	SURFACE ROUGHNESS FACTOR, EQUIVALENT SAND ROUGHNESS. DEFAULT TO 0.16×10^{-3} INCHES, OR 0.406×10^{-3} cm, IF NOT INPUT	ℓ*
SREF	–	REFERENCE AREA. VALUE OF THEORETICAL WING AREA USED BY PROGRAM IF NOT INPUT	A
CBARR	–	LONGITUDINAL REFERENCE LENGTH VALUE OF THEORETICAL WING MEAN AERODYNAMIC CHORD USED BY PROGRAM IF NOT INPUT	ℓ
BLREF	–	LATERAL REFERENCE LENGTH VALUE OF WING SPAN USED BY PROGRAM IF NOT INPUT	ℓ

*UNITS ARE EITHER INCHES OR CENTIMETERS AS DEFINED IN TABLE 8

ROUGHNESS FACTORS FOR USE IN NAMELIST ØPTINS

TYPE OF SURFACE	EQUIVALENT SAND ROUGHNESS	
	INCHES	cm
AERODYNAMICALLY SMOOTH	0	0
POLISHED METAL OR WOOD	$0.02 - 0.08 \times 10^{-3}$	$0.051 - 0.203 \times 10^{-3}$
NATURAL SHEET METAL	0.16×10^{-3}	0.406×10^{-3}
SMOOTH MATTE PAINT, CAREFULLY APPLIED	0.25×10^{-3}	0.635×10^{-3}
STANDARD CAMOUFLAGE PAINT, AVERAGE APPLICATION	0.40×10^{-3}	1.016×10^{-3}
CAMOUFLAGE PAINT, MASS-PRODUCTION SPRAY	1.20×10^{-3}	3.048×10^{-3}
DIP-GALVANIZED METAL SURFACE	6×10^{-3}	15.240×10^{-3}
NATURAL SURFACE OF CAST IRON	10×10^{-3}	25.400×10^{-3}

FIGURE 4 INPUT FOR NAMELIST ØPTINS – REFERENCE PARAMETERS

3.3 GROUP II INPUT DATA

Namelist data to define basic configuration geometry is shown in Figures 5 through 8. Those "special" configurations (Figure 2) are defined using Group III namelists.

The namelist SYNTHS defines the basic configuration synthesis parameters. The user has the option to apply a scale factor to his geometry which permits full scale configuration dimensions to be input for an analysis of a wind tunnel model. The program will use the scale factor to scale the input data to model dimensions. The variable used is "SCALE."

The body configuration is defined using the namelist BØDY (Figure 6). The variable METHØD enables the user to select either the traditional Datcom methods for body C_L, C_m and C_D at low angles of attack (default), or Joergensen's method, which is applicable from zero to 180 degrees angle of attack. Joergensen's method can be used by selecting "METHØD=2" subsonically or supersonically. Users are encouraged to consult the Datcom for details concerning these methods. Digital Datcom will accept an arbitrary origin for the body coordinate system, i.e., body station "zero" is not required to be at the fuselage nose.

The planform geometry of each of the aerodynamic surfaces are input using the namelists WGPLNF, HTPLNF, VTPLNF and VFPLNF shown in Figure 7. The section aerodynamic characteristics for these surfaces are input using either the section characteristics namelists WGSCHR, HTSCHR, VTSCHR and VFSCHR (Figure 8) and/or the NACA control card discussed in Section 3.5. Airfoil characteristics are assumed constant for each panel of the planform.

The USAF Datcom contains three methods for the computation of forward lifting surface downwash field effects on aft lifting surface aerodynamics. They are given in detail in Section 4.4 of Datcom, and their regimes of primary applicability are summarized in Figure 9. The user is cautioned not to apply the empirically based subsonic Method 2 outside the bounds listed in Figure 9. Method 1 is recommended as an optional approach for the b_w/b_h regime of 1.0 to 1.5. By default, Digital Datcom selects Method 3 for b_w/b_h less than 1.5 and Method 1 for span ratios greater than or equal to 1.5. Using the variable DWASH in namelist WGSCHR, the user has the option of applying Method 1 or 2. Method 2 is applicable at subsonic Mach numbers and span ratios of 1.25 to 3.6.

Aspect ratio classification is required to employ the Datcom straight tapered wing solutions for wing or tail lift in the subsonic and transonic Mach regimes. Classification of lifting surface aspect ratio as either high or low results in the selection of appropriate methods for computation. The USAF Datcom uses a classification parameter, which depends upon planform taper ratio and leading edge sweep (Table 9). It also notes an overlap regime where the user may employ either the low or high aspect ratio methods. Digital Datcom allows the user to specify the aspect ratio method to be used in this overlap regime using the parameter ARCL in the section namelists. High aspect ratio methods are automatically selected for unswept, untapered wings with aspect ratios of 3.5 or more if ARCL is not input.

Transonically, several parameters need to be defined to obtain the panel lift characteristics. Those required variables are summarized in Figures 10 and 11 and are input using the experimental data substitution namelist EXPRnn. Additionally, intermediate data may be available, for example C_{ℓ_β}/C_L which requires experimental data to complete. By use of the experimental data input namelist EXPRnn, data can be made available to complete these second-level computations, as shown in Figure 10.

The namelist EXPRnn can also be used to substitute selected configuration data with known test results for some Datcom method output and build a new configuration based on existing data. This option is most useful for theoretically expanding a wind tunnel test data base for analysis of non-tested configurations.

NAMELIST SYNTHS

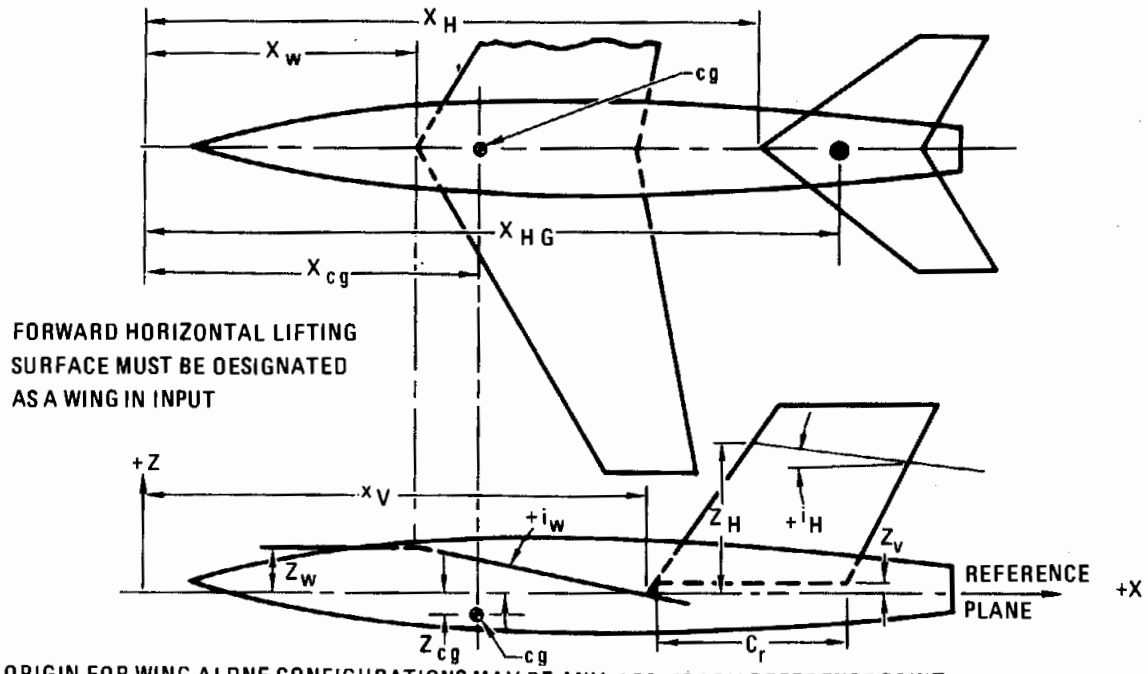

ORIGIN FOR WING ALONE CONFIGURATIONS MAY BE ANY ARBITRARY REFERENCE POINT.

△1 REQUIRED ONLY FOR ALL-MOVABLE HORIZONTAL TAIL TRIM OPTION.
△2 IF HINAX IS INPUT, X_H AND Z_H ARE EVALUATED AT ZERO INCIDENCE (i_W=0)

ENGINEERING SYMBOL	VARIABLE NAME	ARRAY DIMENSION	DEFINITION	UNITS
x_{cg}	XCG	–	LONGITUDINAL LOCATION OF CG, (MOMENT REF. CENTER)	ℓ
z_{cg}	ZCG	–	VERTICAL LOCATION OF CG RELATIVE TO REFERENCE PLANE	ℓ
x_W	XW	–	LONGITUDINAL LOCATION OF THEORETICAL WING APEX	ℓ
z_W	ZW	–	VERTICAL LOCATION OF THEORETICAL WING APEX RELATIVE TO REFERENCE PLANE	ℓ
i_W	ALIW	–	WING ROOT CHORD INCIDENCE ANGLE MEASURED FROM REFERENCE PLANE	DEG
△2 x_H	XH	–	LONGITUDINAL LOCATION OF THEORETICAL HORIZONTAL TAIL APEX	ℓ
△2 z_H	ZH	–	VERTICAL LOCATION OF THEORETICAL HORIZONTAL TAIL APEX RELATIVE TO REFERENCE PLANE	ℓ
i_H	ALIH	–	HORIZONTAL TAIL ROOT CHORD INCIDENCE ANGLE MEASURED FROM REFERENCE PLANE	DEG
x_V	XV	–	LONGITUDINAL LOCATION OF THEORETICAL VERTICAL TAIL APEX	ℓ
x_{V_F}	XVF	–	LONGITUDINAL LOCATION OF THEORETICAL VENTRAL FIN APEX	ℓ
z_V	ZV	–	VERTICAL LOCATION OF THEORETICAL VERTICAL TAIL APEX	ℓ
z_{V_F}	ZVF	–	VERTICAL LOCATION OF THEORETICAL VENTRAL TAIL APEX	ℓ
	SCALE	–	VEHICLE SCALE FACTOR (MULTIPLIER TO INPUT DIMENSIONS)	–
	VERTUP	–	VERTUP = .TRUE. VERTICAL PANEL ABOVE REF PLANE (DEFAULT)	–
		–	VERTUP = .FALSE. VERTICAL PANEL BLEOW REF PLANE	–
△1 x_{HG}	HINAX	–	LONGITUDINAL LOCATION OF HORIZONTAL TAIL HINGE AXIS	ℓ

FIGURE 5 INPUT FOR NAMELIST SYNTHS – SYNTHESIS PARAMETERS

NAMELIST BØDY

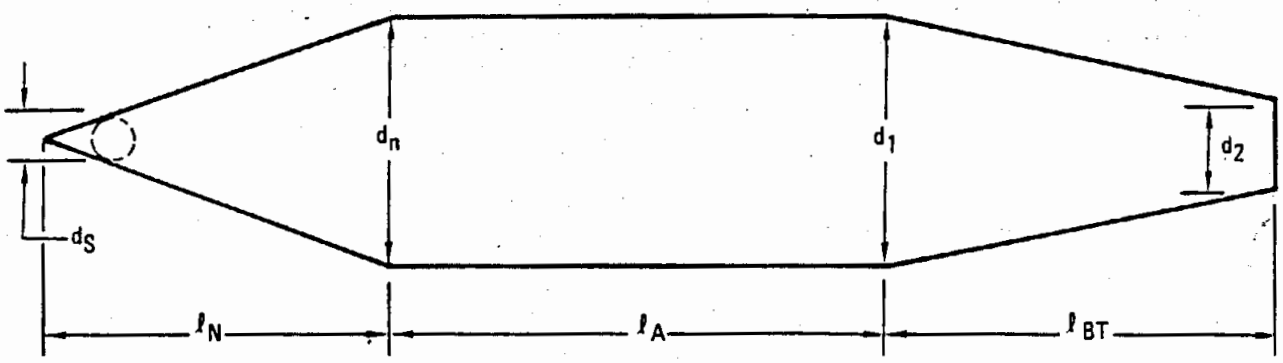

POSSIBLE SUPERSONIC AND HYPERSONIC BODY CONFIGURATIONS

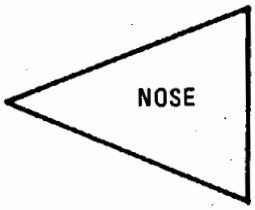

ℓ_N
$\ell_A = \ell_{BT} = 0$
$d_N = d_1 = d_2$

NOTES:
NOSE AND TAIL SEGMENTS MAY BE CONICAL (AS SHOWN) OR OGIVAL.

DIAMETERS d_N, d_1, AND d_2 ARE COMPUTED FROM LINEAR INTERPOLATION OF INPUTS x_i VS R

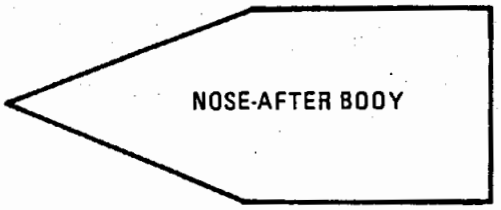

ℓ_N
ℓ_A
$\ell_{BT} = 0$

d_N
$d_1 = d_2$

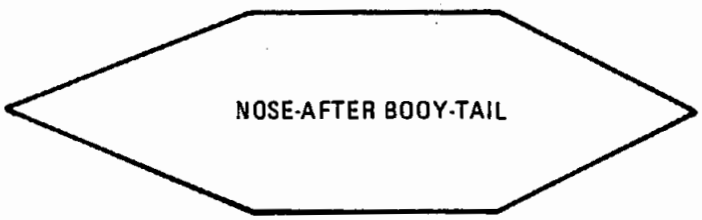

ℓ_N
ℓ_A
ℓ_{BT}
d_N
d_1
$d_2 = 0$

DEFINING ELLIP

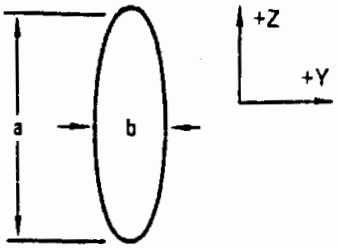

ELLIP > 1

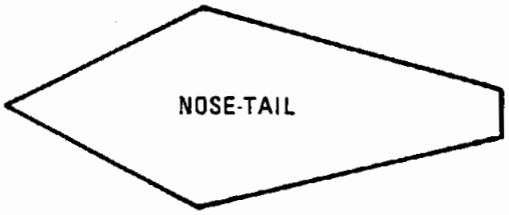

ℓ_N
$\ell_A = 0$
ℓ_{BT}
$d_N = d_1$
d_2

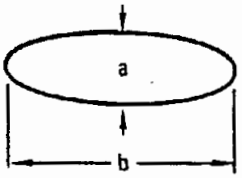

ELLIP < 1

FIGURE 6 INPUT FOR NAMELIST BØDY – BODY GEOMETRIC DATA

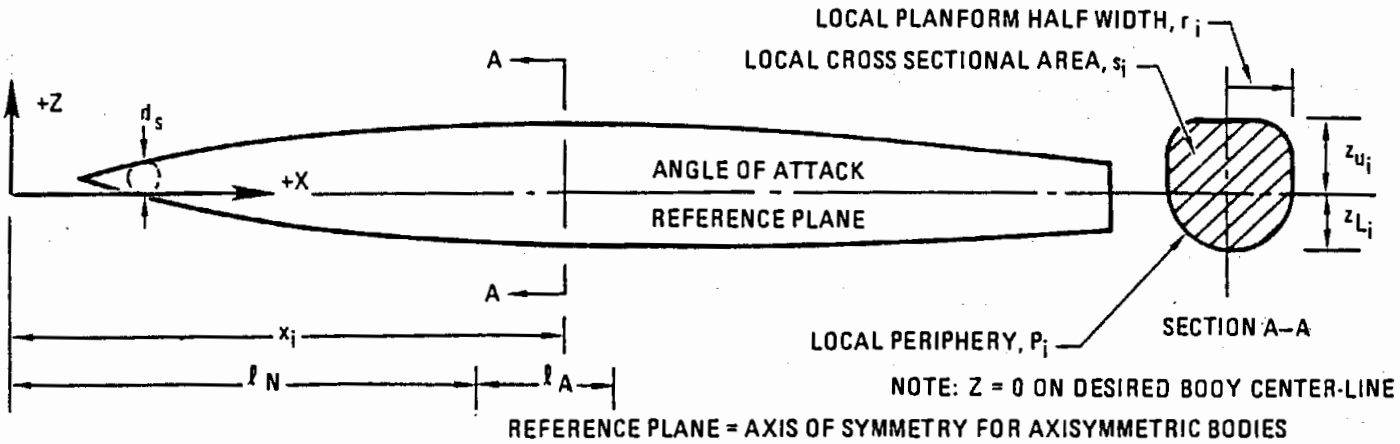

△1 ONLY REQUIRED FOR SUBSONIC ASYMMETRIC BODIES
△2 NOT REQUIRED IN SUBSONIC SPEED REGIME
△3 HYPERSONIC SPEED REGIME ONLY
△4 INPUTS REQUIRED ARE:
- R OR S [REMAINING PARAMETERS EVALUATED ASSUMING A CIRCULAR CROSS-SECTION. IF ELLIP IS SPECIFIED, AN ELLIPTICAL CROSS-SECTION IS ASSUMED]
- R, S AND P ALL SPECIFIED

ENGINEERING SYMBOL	VARIABLE NAME	ARRAY DIMENSION	DEFINITION	UNITS
	NX	–	NUMBER OF LONGITUDINAL BODY STATIONS AT WHICH DATA IS SPECIFIED, MAXIMUM OF 20.	–
x_i	X	20	LONGITUDINAL DISTANCE MEASURED FROM ARBITRARY LOCN	ℓ
S_i	△4 S	20	CROSS SECTIONAL AREA AT STATION x_i	A
P_i	△4 P	20	PERIPHERY AT STATION x_i	ℓ
r_i	△4 R**	20	PLANFORM HALF WIDTH AT STATION x_i	ℓ
z_{u_i}	△1 ZU	20	z – Z-COORDINATE AT UPPER BODY SURFACE AT STATION x_i (POSITIVE WHEN ABOVE CENTERLINE)	ℓ
z_{L_i}	△1 ZL	20	z – Z-COORDINATE AT LOWER BODY SURFACE AT STATION x_i (NEGATIVE WHEN BELOW CENTERLINE)	ℓ
	△2 BNØSE	–	BNOSE = 1.0 CONICAL NOSE, BNOSE = 2.0 OGIVE NOSE	–
	△2 BTAIL	–	BTAIL = 1.0 CONICAL TAIL, BTAIL = 2.0 OGIVE TAIL OMIT FOR $\ell_{BT} = 0$	–
ℓ_N	△2 BLN	–	LENGTH OF BODY NOSE	ℓ
ℓ_A	△2 BLA	–	LENGTH OF CYLINDRICAL AFTERBODY SEGMENT ℓ_A = 0.0 FOR NOSE ALONE OR NOSE-TAIL CONFIGURATIONS	ℓ
d_s	△3 DS	–	NOSE BLUNTNESS DIAMETER, ZERO FOR SHARP NOSEBODIES	ℓ
	ITYPE*	–	= 1. STRAIGHT WING, NO AREA RULE = 2. SWEPT WING, NO AREA RULE = 3. SWEPT WING, AREA RULE SET TO 2.0 IF NOT INPUT	–
	METHØD	–	= 1. USE EXISTING METHODS (DEFAULT) = 2. USE JORGENSEN METHOD	–
e = a/b	ELLIP***	–	ELLIPTICAL BODY HEIGHT TO WIDTH RATIO	–

*USED IN CALCULATION OF TRANSONIC DRAG DIVERGENCE MACH NUMBER, DATCOM FIGURE 4.5.3.1–19
**USE EQUIVALENT RADIUS AT TRANSONIC AND SUPERSONIC MACH NUMBER, $R_{EQ} = \sqrt{S/\pi}$
***METHOD=2 MUST BE SPECIFIED SUBSONICALLY

NAMELISTS WGPLNF, HTPLNF, VTPLNF, AND VFPLNF

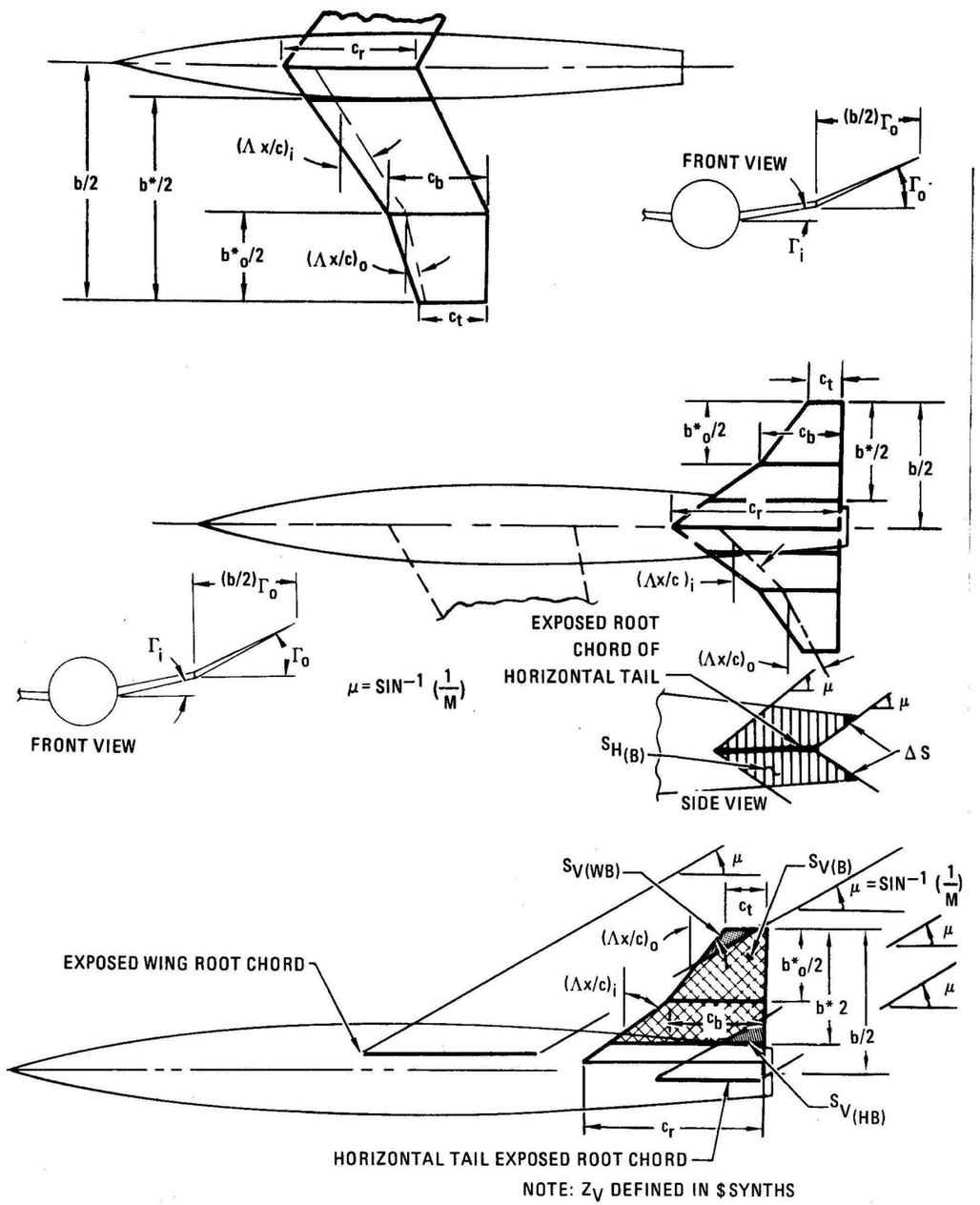

NOTE: Z_V DEFINED IN $SYNTHS

FIGURE 7 INPUT FOR NAMELIST WGPLNF, HTPLNF, VTPLNF AND VFPLNF – PLANFORM VARIABLES

* INDICATES EXPOSED PARAMETER

1 INPUTS NOT REQUIRED FOR STRAIGHT TAPERED PLANFORM

2 ONLY REQUIRED FOR SUPERSONIC AND HYPERSONIC SPEED REGIMES. ONE VALUE REQUIRED FOR EACH MACH NO. VALUES MUST CORRESPOND TO MACH ARRAY. IF NOT INPUT, PROGRAM WILL ATTEMPT TO CALCULATE.

INPUT DATA FOR			ENGINEERING SYMBOL	VARIABLE NAME	ARRAY DIMENSION	DEFINITION	UNITS
WGPLNF	HTPLNF	VTPLNF VFPLNF					
●	●	●	c_t	CHRDTP	–	TIP CHORD	ℓ
●	●	●	$b^*_o/2$	1 SSPNOP	–	SEMI-SPAN OUTBOARD PANEL	ℓ
●	●	●	$b^*/2$	SSPNE	–	SEMI-SPAN EXPOSED PANEL	ℓ
●	●	●	b/2	SSPN	–	SEMI-SPAN THEORETICAL PANEL FROM THEORETICAL ROOT CHORD	ℓ
●	●	●	c_b	1 CHRDBP	–	CHORD AT BREAKPOINT	ℓ
●	●	●	c_r	CHRDR	–	ROOT CHORD	ℓ
●	●	●	$(\Lambda_{x/c})_i$	SAVSI	–	INBOARD PANEL SWEEP ANGLE	DEG
●	●	●	$(\Lambda_{x/c})_o$	1 SAVSO	–	OUTBOARD PANEL SWEEP ANGLE	DEG
●	●	●	x/c	CHSTAT	–	REFERENCE CHORD STATION FOR INBOARD AND OUTBOARD PANEL SWEEP ANGLES, FRACTION OF CHORD	–
●	●		Θ	TWISTA	–	TWIST ANGLE, NEGATIVE LEADING EDGE ROTATED DOWN (FROM EXPOSED ROOT TO TIP) TWASH OUT	DEG
●	●		$(b/2)_{\Gamma_o}$	1 SSPNDD	–	SEMI-SPAN OF OUTBOARD PANEL WITH DIHEDRAL	ℓ
●	●		Γ_i	DHDADI	–	DIHEDRAL ANGLE OF INBOARD PANEL (IF $\Gamma_i = \Gamma_o$ ONLY INPUT Γ_i)	DEG
●	●		Γ_o	DHDADO	–	DIHEDRAL ANGLE OF OUTBOARD PANEL	DEG
●	●	●		TYPE	–	= 1.0 STRAIGHT TAPERED PLANFORM = 2.0 DOUBLE DELTA PLANFORM (ASPECT RATIO ≤ 3) = 3.0 CRANKED PLANFORM (ASPECT RATIO > 3)	–
	●		$S_{H(B)}$	2 SHB	20	PORTION OF FUSELAGE SIDE AREA THAT LIES BETWEEN MACH LINES ORIGINATING FROM LEADING AND TRAILING EDGES OF HORIZONTAL TAIL EXPOSED ROOT CHORD	A
	●		S_{ext}	2 SEXT	20	PORTION OF EXTENDED FUSELAGE SIDE AREA THAT LIES BETWEEN MACH LINES ORIGINATING FROM LEADING AND TRAILING EDGES OF HORIZONTAL TAIL EXPOSED ROOT CHORD $S_{ext} = S_{H(B)} + 2\Delta S$	A
	●		ℓ_P	2 RLPH	20	LONGITUDINAL DISTANCE BETWEEN CG AND CENTROID OF $S_{H(B)}$, POSITIVE AFT OF CG	ℓ
		●	$S_{V(WB)}$	2 SVWB	20	PORTION OF EXPOSED VERTICAL PANEL AREA THAT LIES BETWEEN MACH LINES EMANATING FROM LEADING AND TRAILING EDGES OF WING EXPOSED ROOT CHORD	A
		●	$S_{V(B)}$	2 SVB	20	AREA OF EXPOSED VERTICAL PANEL NOT INFLUENCED BY WING OR HORIZONTAL TAIL	A
		●	$S_{V(HB)}$	2 SVHB	20	PORTION OF EXPOSED VERTICAL PANEL AREA THAT LIES BETWEEN MACH LINES EMANATING FROM LEADING AND TRAILING EDGES OF HORIZONTAL TAIL EXPOSED ROOT CHORD	A

INPUTS FOR NAMELIST			ENGINEERING SYMBOL	VARIABLE NAME	ARRAY DIMENSION	DEFINITION	INPUTS PER SPEED REGIME			
WGSCHR	HTSCHR	VTSCHR, VFSCHR					SUBSONIC	TRANSONIC	SUPERSONIC	HYPERSONIC
●	●	●	t/c	TØVC	–	MAXIMUM AIRFOIL SECTION THICKNESS, FRACTION OF CHORD	■	■	■	■
●	●		Δ_y	DELTAY	–	DIFFERENCE BETWEEN AIRFOIL ORDINATES AT 6.0 AND .15% CHORD, PERCENT CHORD	■	■	■	■
●	●	●	$(x/c)_{MAX}$	XØVC	–	CHORD LOCATION OF MAXIMUM AIRFOIL THICKNESS, FRACTION OF CHORD	■	■		
●	●		C_{l_i}	CLI	–	AIRFOIL SECTION DESIGN LIFT COEFFICIENT	■	■		
●	●		α_i	ALPHAI	–	ANGLE OF ATTACK AT SECTION DESIGN LIFT COEFFICIENT, DEG	■	■		
●	●	●	C_{l_α}	CLALPA △4	20	AIRFOIL SECTION LIFT CURVE SLOPE $\frac{dC_l}{d\alpha}$, PER DEG.	■			
●	●		$C_{l_{max}}$	CLMAX △4	20	AIRFOIL SECTION MAXIMUM LIFT COEFFICIENT	■			
●	●		C_{m_0}	CMO OR CMØ	–	SECTION ZERO LIFT PITCHING MOMENT COEFFICIENT	■	■		
●	●	●	$(R_{LE})_i$	LERI	–	AIRFOIL LEADING EDGE RADIUS FRACTION OF CHORD	■	■	■	■
●	●	●	$(R_{LE})_o$	LERØ △3	–	R_{LE} FOR OUTBOARD PANEL FRACTION OF CHORD	●	●	●	●
●	●			CAMBER=TRUE	–	CAMBERED AIRFOIL SECTION FLAG	■			
●	●	●	$(t/c)_0$	TØVCØ △3	–	t/c FOR OUTBOARD PANEL	●	●	○	○
●	●	●	$(x/c)_{MAX_0}$	XØVCØ △3	–	$(x/c)_{MAX}$ FOR OUTBOARD PANEL	●	○	○	○
●	●		$(C_{m_0})_0$	CMØT OR CMOT △3	–	C_{m_0} FOR OUTBOARD PANEL	●	●	○	○
●			$(C_{l_{MAX}})_{M=0}$	CLMAXL	–	AIRFOIL MAXIMUM LIFT COEFFICIENT AT MACH EQUAL ZERO	■	■		
●	●		$(C_{l_\alpha})_{M=0}$	CLAMO OR CLAMØ	–	AIRFOIL SECTION LIFT CURVE SLOPE AT MACH EQUAL ZERO, PER DEG		■		
●	●	●	$(t/c)_{eff}$	TCEFF	–	PLANFORM EFFECTIVE THICKNESS RATIO, FRACTION OF CHORD		■	■	■
●	●	●	K	KSHARP △6	–	WAVE-DRAG FACTOR FOR SHARP-NOSED AIRFOIL SECTION, NOT INPUT FOR ROUND NOSED AIRFOILS		■	■	■
●			δ_n	SLØPE △6	6	AIRFOIL SURFACE SLOPE AT 0,20,40 60, 80, AND 100% CHORD, DEG. POSITIVE WHEN THE TANGENT INTERSECTS THE CHORD PLANE FORWARD OF THE REFERENCE CHORD POINT		■	■	■
●	●	●		ARCL	–	ASPECT RATIO CLASSIFICATION (SEE TABLE 9)	○	○	○	○

FIGURE 8 INPUT FOR NAMELISTS WGSCHR, HTSCHR, VTSCHR AND VFSCHR – SECTION CHARACTERISTICS

INPUTS FOR NAMELIST			ENGINEERING SYMBOL	VARIABLE NAME	ARRAY DIMENSION	DEFINITION	INPUTS PER SPEED REGIME			
WGSCHR	HTSCHR	VTSCHR, VFSCHR					SUBSONIC	TRANSONIC	SUPERSONIC	HYPERSONIC
●	●		X_{ac}/C	XAC △4	20	SECTION AERODYNAMIC CENTER, FRACTION OF CHORD (SEE VOL II FOR DEFAULT)	□		□	
●				DWASH △2	–	SUBSONIC DOWNWASH METHOD FLAG = 1. USE DATCOM METHOD 1 = 2. USE DATCOM METHOD 2 = 3. USE DATCOM METHOD 3 SUPERSONIC, USE DATCOM METHOD 2 IF DWASH = 1 OR 2 (SEE FIGURE 9)	○		○	
●	●		$(y/c)_{max}$	YCM	–	AIRFOIL MAXIMUM CAMBER, FRACTION OF CHORD	■	■	■	■
●	●		C_{L_d}	CLD △1	–	CONICAL CAMBER DESIGN LIFT COEFFICIENT FOR M = 1.0 DESIGN. SEE–NACA RM A55G19 (DEFAULT TO 0.0)	●	●	●	●
●	●	●		TYPEIN	–	TYPE OF AIRFOIL SECTION COORDINATES INPUT FOR AIRFOIL SECTION MODULE = 1.0 UPPER AND LOWER SURFACE COORDINATES (YUPPER AND YLOWER) = 2.0 MEAN LINE AND THICKNESS DISTRIBUTION (MEAN AND THICK)	○	○	○	○
●	●	●		NPTS	–	NUMBER OF SECTION POINTS INPUT, MAX. = 50	○	○	○	○
●	●	●	X_c/C	XCØRD △7	50	ABSCISSAS OF INPUT POINTS, TYPEIN = 1.0 OR 2.0, XCØRD(1) = 0.0 XCØRD(NPTS) = 1.0 REQUIRED	○	○	○	○
●	●	●	Y_u/C	YUPPER △5	50	ORDINATES OF UPPER SURFACE, TYPEIN = 1.0 FRACTION OF CHORD, AND REQUIRES YUPPER(1) = 0.0 YUPPER(NPTS) = 0.0	○	○	○	○
●	●	●	Y_L/C	YLØWER △5	50	ORDINATES OF LOWER SURFACE, TYPEIN = 1.0 FRACTION OF CHORD, AND REQUIRES YLOWER(1) = 0.0 YLOWER(NPTS) = 0.0	○	○	○	○
●	●	●	Y_m/C	MEAN △5	50	ORDINATES OF MEAN LINE, TYPEIN = 2.0 FRACTION OF CHORD, AND REQUIRES MEAN(1) = 0.0 MEAN(NPTS) = 0.0	○	○	○	○
●	●	●	t_c/C	THICK △5	50	THICKNESS DISTRIBUTION, TYPEIN = 2.0 FRACTION OF CHORD, AND REQUIRES THICK(1) = 0.0 THICK(NPTS) = 0.0	○	○	○	○

● REQUIRED INPUT
○ OPTIONAL INPUT
■ REQUIRED INPUT, USER SUPPLIED OR COMPUTED BY AIRFOIL SECTION MODULE IF AIRFOIL DEFINED WITH NACA CARD OR SECTION COORDINATES
□ OPTIONAL INPUT, COMPUTED BY AIRFOIL SECTION MODULE IF AIRFOIL DEFINED WITH NACA CARD OR SECTION COORDINATES

WAVE-DRAG FACTORS FOR SHARP NOSE AIRFOILS

BASIC WING AIRFOIL SECTION	KSHARP	SECTION
BICONVEX	$\frac{16}{3}$	
DOUBLE WEDGE	$\frac{c/x_t}{1 - x_t/c}$	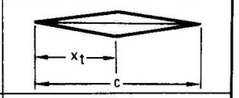
HEXAGONAL	$\frac{c(c-x_2)}{x_1 \; x_3}$	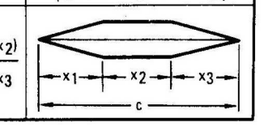

TCEFF – PLANFORM EFFECTIVE THICKNESS RATIO.
FOR STRAIGHT TAPERED PLANFORMS, TCEFF = TØVC.
FOR NONSTRAIGHT PLANFORMS:

$$TCEFF = \left[\frac{\int_0^{b/2} \left(\frac{t}{c}\right)^2 c \; dy}{\int_0^{b/2} c \; dy}\right]^{1/2}$$

$$= \left[\frac{\int_0^{b/2} \left(\frac{t}{c}\right)^2 c \; dy}{\frac{S}{2}}\right]^{1/2}$$

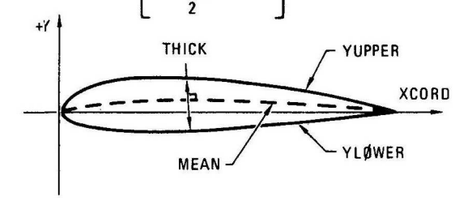

△1 SEE DATCOM SECTIONS 4.3.2.1 AND 4.3.3.2 (LINEAR REGRESSION METHODS) IF SET LESS THAN ZERO WILL BYPASS THE REGRESSION METHODS
△2 INPUT ONLY FOR CONFIGURATIONS WITH A HORIZONTAL TAIL
△3 NOT REQUIRED FOR STRAIGHT TAPERED PLANFORMS
△4 ARRAY ELEMENTS MUST CORRESPOND TO THE MACH OR VINF ARRAY (NAMELIST FLTCØN)
△5 ARRAY ELEMENTS MUST CORRESPOND TO THE XCØRD ARRAY
△6 ONLY CALCULATED FOR SUPERSONIC AIRFOILS USING NACA CARD.
△7 SEE SECTION B.3.2 FOR INPUT RECOMMENDATIONS

TABLE 9 ASPECT RATIO CLASSIFICATION "ARCL"

BORDER-LINE RANGE:

$$\frac{3}{(C_1 + 1)\cos\Lambda_{LE}} \leqslant A \leqslant \frac{4}{(C_1 + 1)\cos\Lambda_{LE}}$$

"ARCL" CAN BE SET IN NAMELISTS WGSCHR, HTSCHR, VTSCHR AND VFSCHR TO SELECT EITHER LOW OR HIGH ASPECT RATIO METHODS. WHEN "ARCL" IS NOT SET, AND "A" IS IN THE BORDER-LINE RANGE, THE FOLLOWING CRITERIA ARE USED:

$$A < \frac{3.5}{(C_1 + 1)\cos\Lambda_{LE}} \quad \text{"LOW ASPECT RATIO"}$$

$$A \geqslant \frac{3.5}{(C_1 + 1)\cos\Lambda_{LE}} \quad \text{"HIGH ASPECT RATIO"}$$

SEE DATCOM SECTION 4.1.3.3

METHOD 1

$b_w/b_h \geq 1.5$

METHOD 2 (EMPIRICAL METHOD)

$1.25 \leq b_w/b_h \leq 3.6$

METHOD 3 (CANARD METHOD)

$b_w/b_h \leq 1.0$

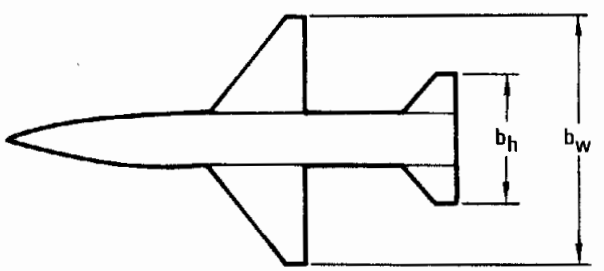

METHOD IN RANGE $1.0 \leq b_w/b_h \leq 1.5$ CAN BE SELECTED USING VARIABLE "OWASH" IN NAMELIST WGSCHR

FIGURE 9 PRIMARY APPLICATION REGIMES FOR SUBSONIC DOWNWASH METHODS IN DATCOM

DEFINING THE TRANSONIC WING AND HORIZONTAL TAIL LIFT CURVE

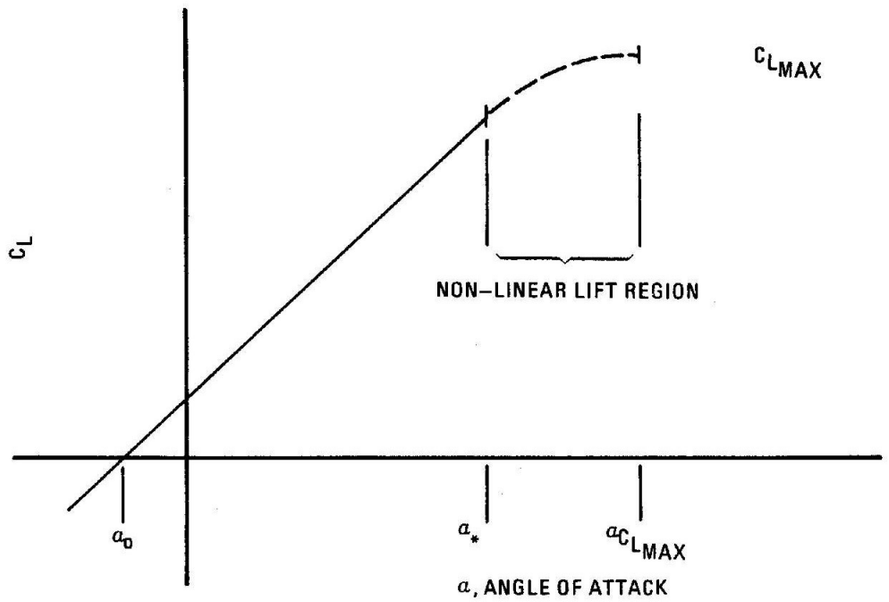

NOTES:

1. IF α_0 AND α_* ARE INPUT USING EXPR -- THE LINEAR LIFT REGION IS DEFINED.
2. IF $\alpha C_{L_{MAX}}$ AND $C_{L_{MAX}}$ ARE ALSO INPUT USING EXPR -- THE COMPLETE LIFT CURVE IS DEFINED.
3. IF THE COMPLETE LIFT CURVES FOR THE WING AND HORIZONTAL TAIL ARE DEFINED AND BOTH SURFACES HAVE STRAIGHT TAPERED PLANFORMS, ALL DATA DESIGNATED IN TABLE 2 THAT REQUIRE EXPERIMENTAL DATA INPUT ARE CALCULATED.
4. IF THE BODY LIFT CURVE IS INPUT AT TRANSONIC MACH NUMBERS, CONFIGURATION DATA INVOLVING THE BODY ARE SIGNIFICANTLY IMPROVED.

FIGURE 10 TRANSONIC EXPERIMENTAL DATA SUBSTITUTION

TRANSONIC DATA AVAILABLE WITH EXPERIMENTAL DATA SUBSTITUTION

GIVEN	DATA CALCULATED
NONE	VERT. C_{D_0} W–B C_L H–B C_L W–B–H, W–B–V, & W–B–H–V C_{D_0}
WING C_L VS α	WING $C_D, C_N, C_A, C_{\ell\beta}$ W–B $C_D, C_N, C_A, C_{\ell\beta}$ W–B–V C_D, C_L, C_N, C_A
HORIZ. C_L VS α	HORIZ. $C_D, C_N, C_A, C_{\ell\beta}$ H–B $C_D, C_N, C_A, C_{\ell\beta}$
BODY C_L VS α	B–V C_L, C_N, C_A
W–B C_L VS α HORIZ. C_L & C_D VS α q/q_∞ & ϵ VS α	W–B–T C_D
W–B C_L VS α HORIZ. C_L VS α q/q_∞, ϵ, & $d\epsilon/d\alpha$ VS α	W–B–T C_L

ENGINEERING SYMBOL	VARIABLE NAME	ARRAY DIMENSION	DEFINITION
$(C_{L_\alpha})_B$	CLAB	20	BODY LIFT CURVE SLOPE VS ANGLE OF ATTACK, PER DEGREE
$(C_{m_\alpha})_B$	CMAB	20	BODY PITCHING MOMENT SLOPE VS ANGLE OF ATTACK, PER DEGREE
$(C_D)_B$	CDB	20	BODY DRAG COEFFICIENT VS ANGLE OF ATTACK
$(C_L)_B$	CLB	20	BODY LIFT COEFFICIENT VS ANGLE OF ATTACK
$(C_m)_B$	CMB	20	BODY PITCHING MOMENT COEFFICIENT VS ANGLE OF ATTACK
$(C_{L_\alpha})_W$	CLAW	20	WING LIFT CURVE SLOPE VS ANGLE OF ATTACK, PER DEGREE
$(C_{m_\alpha})_W$	CMAW	20	WING PITCHING MOMENT SLOPE VS ANGLE OF ATTACK, PER DEGREE
$(C_D)_W$	CDW	20	WING DRAG COEFFICIENT VS ANGLE OF ATTACK
$(C_L)_W$	CLW	20	WING LIFT COEFFICIENT VS ANGLE OF ATTACK
$(C_m)_W$	CMW	20	WING PITCHING MOMENT COEFFICIENT VS ANGLE OF ATTACK
$(C_{L_\alpha})_H$	CLAH	20	HORIZONTAL TAIL LIFT CURVE SLOPE VS ANGLE OF ATTACK, PER DEGREE
$(C_{m_\alpha})_H$	CMAH	20	HORIZONTAL TAIL PITCHING MOMENT SLOPE VS ANGLE OF ATTACK, PER DEGREE
$(C_D)_H$	CDH	20	HORIZONTAL TAIL DRAG COEFFICIENT VS ANGLE OF ATTACK
$(C_L)_H$	CLH	20	HORIZONTAL TAIL LIFT COEFFICIENT VS ANGLE OF ATTACK
$(C_m)_H$	CMH	20	HORIZONTAL TAIL PITCHING MOMENT COEFFICIENT VS ANGLE OF ATTACK
$(C_{D_0})_V$	COV	–	VERTICAL TAIL ZERO LIFT DRAG COEFFICIENT
$(C_{L_\alpha})_{WB}$	CLAWB	20	WING-BODY LIFT CURVE SLOPE VS ANGLE OF ATTACK, PER DEGREE
$(C_{m_\alpha})_{WB}$	CMAWB	20	WING-BODY PITCHING MOMENT SLOPE VS ANGLE OF ATTACK, PER DEGREE
$(C_D)_{WB}$	CDWB	20	WING-BODY DRAG COEFFICIENT VS ANGLE OF ATTACK
$(C_L)_{WB}$	CLWB	20	WING-BODY LIFT COEFFICIENT VS ANGLE OF ATTACK
$(C_m)_{WB}$	CMWB	20	WING-BODY PITCHING MOMENT COEFFICIENT VS ANGLE OF ATTACK
$d\epsilon/d\alpha$	DEØDA	20	DOWNWASH GRADIENT VS ANGLE OF ATTACK
ϵ	EPSLØN	20	DOWNWASH ANGLE VS ANGLE OF ATTACK, DEGREES
q_H/q_∞	QØQINF	20	RATIO OF HORIZONTAL TAIL DYNAMIC PRESSURE TO THE FREE STREAM VALUE VS ANGLE OF ATTACK
$(\alpha_0)_W$ △2	ALPØW	–	WING ZERO LIFT ANGLE OF ATTACK, DEG
$(\alpha^*)_W$ △2	ALPLW	–	WING ANGLE OF ATTACK WHERE LIFT BECOMES NON-LINEAR, DEG
$(\alpha_{C_{LMAX}})_W$ △2	ACLMW	–	WING ANGLE OF ATTACK FOR MAX. LIFT, DEG
$(C_{LMAX})_W$ △2	CLMW	–	WING MAX. LIFT COEFFICIENT
$(\alpha_0)_H$ △2	ALPØH	–	HORIZONTAL TAIL ZERO LIFT ANGLE OF ATTACK, DEG
$(\alpha^*)_H$ △2	ALPLH	–	HORIZONTAL TAIL ANGLE OF ATTACK WHERE LIFT BECOMES NON-LINEAR, DEG
$(\alpha_{C_{LMAX}})_H$ △2	ACLMH	–	HORIZONTAL TAIL ANGLE OF ATTACK FOR MAX. LIFT, DEG
$(C_{LMAX})_H$ △2	CLMH	–	HORIZONTAL TAIL MAX. LIFT COEFFICIENT

NOTE: 1 EXPERIMENTAL DATA PARAMETERS MUST BE BASED ON THE REFERENCE AREA AND LENGTHS AS USED BY DIGITAL DATCOM. SEE FIGURE 4 FOR DEFINITION OF DIGITAL DATCOM REFERENCE PARAMETERS.

△2 REQUIRED TO SUPPORT TRANSONIC SECOND LEVEL METHODS, USED ONLY AT TRANSONIC MACH NUMBERS. THE USE OF THESE PARAMETERS IS SHOWN IN FIGURE 9.

3 EACH EXPERIMENTAL DATA NAMELIST REPRESENTS DATA FOR ONE MACH NUMBER. THE LAST TWO DIGITS OF THE NAMELIST NAME CORRESPONDS TO THE MACH NUMBER SEQUENCE IN NAMELIST FLTCØN, FIGURE 3. NAMELIST EXPR01 PROVIDES EXPERIMENTAL DATA FOR THE FIRST MACH NUMBER, EXPR02 THE SECOND, EXPR15 THE FIFTEENTH, ETC. ALL SIX CHARACTERS IN THE NAMELIST NAME MUST BE SPECIFIED.

FIGURE 11 INPUT FOR NAMELIST EXPRnn– EXPERIMENTAL DATA INPUT

3.4 GROUP III INPUT DATA

The namelists required for additional or "special" configuration definition are presented in Figures 12 through 22, and Tables 10 through 12. Specifically, the namelists PRØPWR, JETPWR, GRNDEF, TVTPAN, ASYFLP and CØNTAB enable the user to "build upon" the configuration defined through Group II inputs. The remaining namelists LARWB, TRNJET and HYPEFF define "stand alone" configurations whose namelists are not used with Group II inputs.

The inputs for propellor power or jet power effects are made through namelists PRØPWR and JETPWE, respectively. The number of engines allowable is one or two and the engines may be located anywhere on the configuration. The configuration must have a body and a wing defined and, optionally, a horizontal tail and a vertical tail. Since the Datcom method accounts for incremental aerodynamic effects due to power, configuration changes required to account for proper placement of the engine(s) on the configuration (e.g., pylons) are not taken into account.

Twin vertical panels, defined by namelist TVTPAN, can be defined on either the wing or horizontal tail. Since the method only computes the incremental lateral stability results, "end-plate" affects on the longitudinal characteristics are not calculated. If the twin vertical panels are present on the horizontal tail, and a vertical tail or ventral fin is specified, the mutual interference among the panels is not computed.

Inputs for the high lift and control devices are made with the namelists SYMFLP, ASYFLP and CØNTAB. In general, the eight flap types defined using SYMFLP (variable FTYPE) are assumed to be located on the most aft lifting surface, either horizontal tail or wing if a horizontal tail is not defined. Jet flaps, also defined using SYMFLP, will always be located on the wing, even with the presence of a horizontal tail. Control tabs (namelist CØNTAB) are assumed to be mounted on a plain trailing edge flap (FTYPE=1); therefore, for a control tab analysis namelists CØNTAB and SYMFLP (with FTYPE=1) must both be input. For ASYFLP namelist inputs, the spoiler and aileron devices (STYPE of 1., 2., 3. or 4.) are defined for the wing, even with the presence of a horizontal tail, whereas the all-moveable horizontal tail (STYPE=5.0) is, of course, a horizontal tail device.

NAMELIST PRØPWR

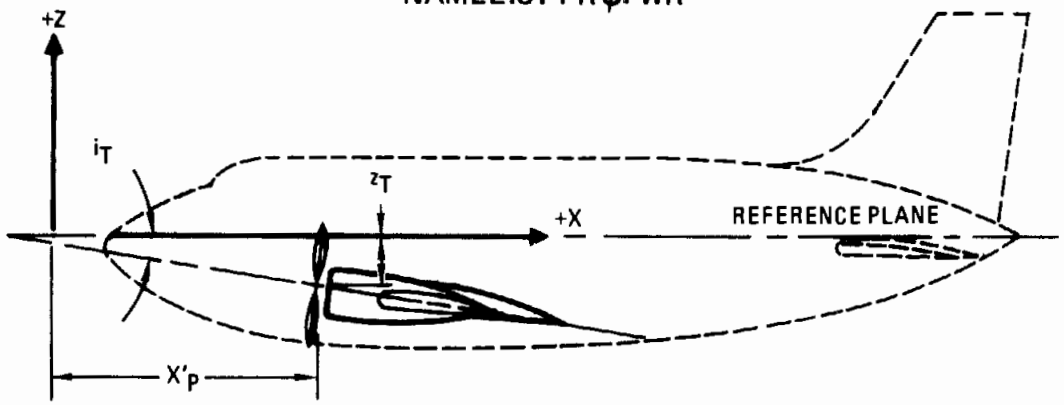

PROPELLER POWER EFFECT METHODS ARE ONLY APPLICABLE TO LONGITUDINAL STABILITY PARAMETERS IN THE SUBSONIC SPEED REGIME.

ENGINEERING SYMBOL	VARIABLE NAME	ARRAY DIMENSION	DEFINITION	UNITS
i_T	AIETLP	–	ANGLE OF INCIDENCE OF ENGINE THRUST AXIS,	DEG
n	NENGSP	–	NUMBER OF ENGINES (1 OR 2)	–
t'_c	THSTCP	–	THRUST COEFFICIENT = $\frac{2T}{P_\infty V_\infty^2 S_{REF}}$	–
x'_P	PHALØC	–	AXIAL LOCATION OF PROPELLER HUB	ℓ
Z_T	PHVLØC	–	VERTICAL LOCATION OF PROPELLER HUB	ℓ
R_P	PRPRAD	–	PRDPELLER RADIUS	ℓ
K_N	ENGFCT	–	EMPIRICAL NORMAL FDRCE FACTOR	–
$(b_p)_{0.3R_P}$	BWAPR3	–	BLADE WIOTH AT 0.3 PROPELLER RADIUS	ℓ
$(b_p)_{0.6R_P}$	BWAPR6 ⚠1	–	BLADE WIDTH AT 0.6 PROPELLER RADIUS	ℓ
$(b_p)_{0.9R_P}$	BWAPR9	–	BLAOE WIDTH AT 0.9 PROPELLER RADIUS	ℓ
N_B	NØPBPE	–	NUMBER OF PROPELLER BLADES PER ENGINE	–
$(\beta)_{0.75R_P}$	BAPR75	–	BLADE ANGLE AT 0.75 PROPELLER RADIUS	DEG
Y_P	YP	–	LATERAL LDCATION OF ENGINE	ℓ
	CRØT	–	.TRUE. COUNTER ROTATING PRDPELLER .FALSE. NON COUNTER ROTATING PROPELLER	–

⚠1 K_N IS NOT REQUIRED AS INPUT IF (b_p)'s ARE INPUT AND CONVERSELY (b_p)'s ARE NOT REQUIRED IF K_N IS INPUT. (SEE SECTION 4.6.1 OF DATCOM)

FIGURE 12 INPUT FOR NAMELIST PRØPWR – PROPELLOR POWER PARAMETERS

NAMELIST JETPWR

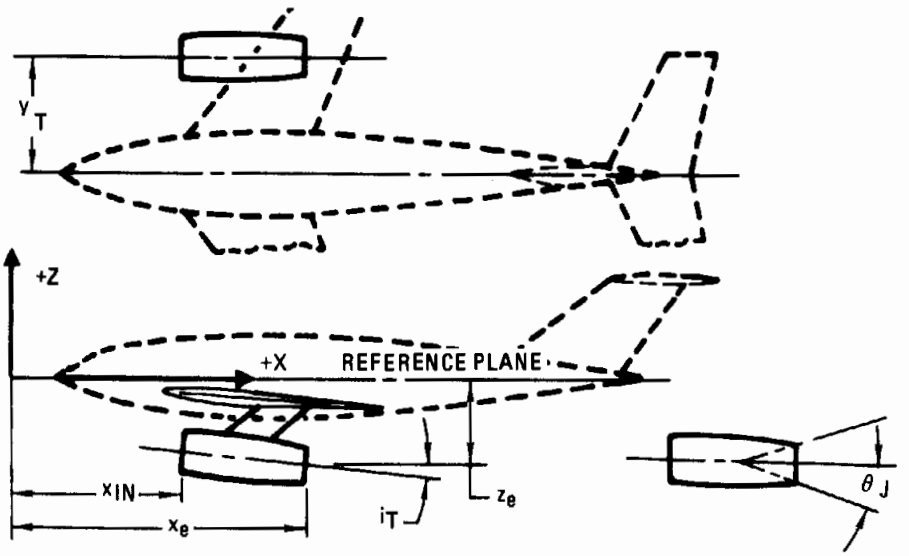

JET POWER EFFECT METHODS ARE ONLY APPLICABLE TO LONGITUDINAL STABILITY PARAMETERS IN THE SUBSONIC SPEED REGIME.

JET POWER INPUTS ARE REQUIRED FOR EXTERNALLY BLOWN JET FLAP (EBF) CONFIGURATIONS. NOT REQUIREO PURE JET FLAPS OR INTERNALLY BLOWN FLAPS (IBF)

EBF JET FLAP INPUTS	JET POWER INPUTS	ENGINEERING SYMBOL	NAME	ARRAY DIMENSION	DEFINITION	UNITS
●	●	i_T	AIETLJ	–	ANGLE OF INCIDENCE OF ENGINE THRUST LINE	DEG
	●	n	NENGSJ	–	NUMBER OF ENGINES (1 OR 2)	–
	●	T_c	THSTCJ	–	THRUST COEFFICIENT = $\frac{2T}{\rho_\infty V_\infty^2 S_{REF}}$	–
	●	x_{IN}	JIALØC	–	AXIAL LOCATION OF JET ENGINE INLET	ℓ
●	●	z_e	JEVLØC	–	VERTICAL LOCATION OF JET ENGINE EXIT	ℓ
●	●	x_e	JEALØC	–	AXIAL LOCATION OF JET ENGINE EXIT	ℓ
	●	A_I	JINLTA	–	JET ENGINE INLET AREA	A
●	●	θ_J	JEANGL	–	JET EXIT ANGLE	DEG
	●	V_J	JEVELØ	–	JET EXIT VELOCITY	ℓ/t
	●	T_∞	AMBTMP	–	AMBIENT TEMPERATURE	DEG
	●	T_J	JESTMP	–	JET EXIT STATIC TEMPERATURE	DEG
●	●	y_T	JELLØC	–	LATERAL LOCATION OF JET ENGINE	ℓ
	●	p'_o	JETØTP	–	JET EXIT TOTAL PRESSURE	F/A
	●	P_∞	AMBSTP	–	AMBIENT STATIC PRESSURE	F/A
●	●	R_j	JERAD	–	RADIUS OF JET EXIT	ℓ

FIGURE 13 INPUT FOR NAMELIST JETPWR – JET POWER PARAMETERS

NAMELIST GRNDEF

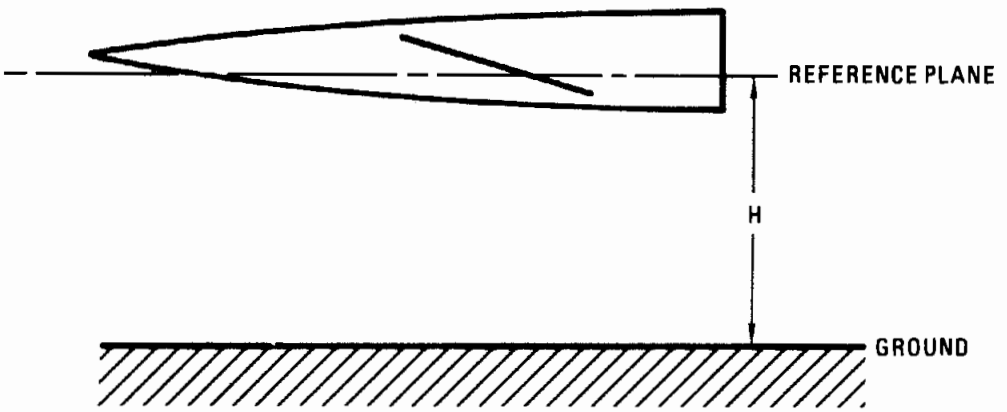

GROUND EFFECT METHODS ARE ONLY APPLICABLE TO LONGITUDINAL STABILITY PARAMETERS IN THE SUBSONIC SPEED REGIME.

ENGINEERING SYMBOL	VARIABLE NAME	ARRAY DIMENSION	DEFINITION	UNITS
N_H	NGH	–	NUMBER OF GROUND HEIGHTS TO BE RUN	–
H	GRDHT	10	VALUES OF GROUND HEIGHTS. GROUND HEIGHTS EQUAL ALTITUDE OF REF. PLANE RELATIVE TO GROUND	l

FIGURE 14 INPUT FOR NAMELIST GRNDEF – GROUND EFFECT DATA

NAMELIST TVTPAN

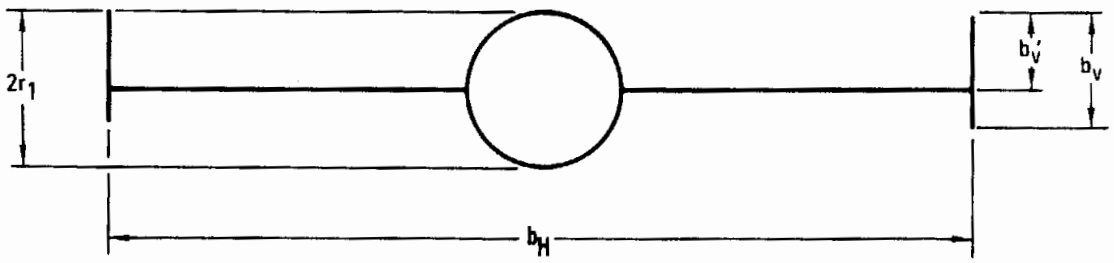

EFFECTS OF TWIN VERTICAL PANELS ONLY REFLECTED IN SUBSONIC LATERAL STABILITY RESULTS

ENGINEERING SYMBOL	VARIABLE NAME	ARRAY DIMENSION	DEFINITION	UNITS
b_V'	BVP	–	VERTICAL PANEL SPAN ABOVE LIFTING SURFACE	ℓ
b_V	BV	–	VERTICAL PANEL SPAN	ℓ
$2r_1$	BDV	–	FUSELAGE DEPTH AT QUARTER CHORD-POINT OF VERTICAL PANEL MEAN AERODYNAMIC CHORD	ℓ
b_H	BH	–	DISTANCE BETWEEN VERTICAL PANELS	ℓ
S_V	SV	–	PLAN FORM AREA OF ONE VERTICAL PANEL	A
ϕ_{TE}	VPHITE	–	TOTAL TRAILING-EDGE ANGLE OF VERTICAL PANEL AIRFOIL SECTION	DEG
ℓ_P	VLP	–	DISTANCE PARALLEL TO LONG. AXIS BETWEEN THE CG AND THE QUARTER CHORD POINT OF THE MAC OF THE PANEL. POSITIVE IF AFT OF CG.	ℓ
Z_P	ZP	–	DISTANCE IN THE Z DIRECTION BETWEEN THE CG AND THE MAC OF THE PANEL, POSITIVE FOR PANEL ABOVE CG.	ℓ

FIGURE 15 INPUT FOR NAMELIST TVTPAN – TWIN-VERTICAL PANEL INPUT

NAMELIST SYMFLP

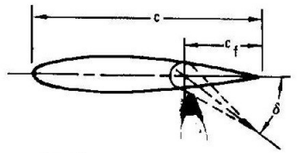

PLAIN TRAILING-EDGE FLAP

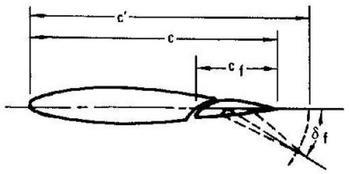

SINGLE-SLOTTED FLAP

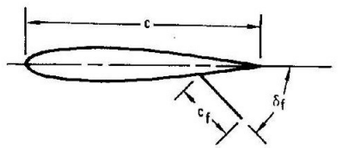

SPLIT FLAP

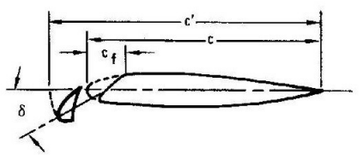

LEADING-EDGE SLAT

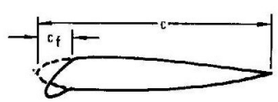

LEADING-EDGE-FLAP

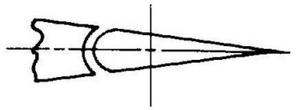

ROUND NOSE FLAP
NTYPE = 1.0

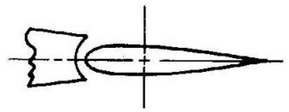

ELLIPTIC NOSE FLAP
NTYPE = 2.0

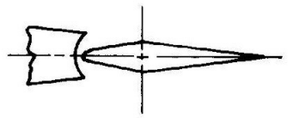

SHARP NOSE FLAP
NTYPE = 3.0

CLASSIFICATION OF PLAIN FLAP NOSE SHAPES

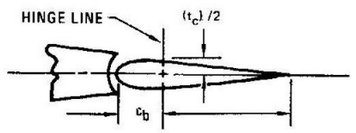

CONTROL BALANCE INPUT VARIABLES

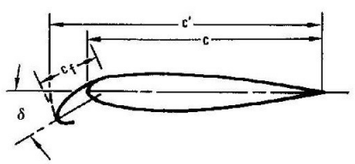

KRUEGER FLAP

ENGR SYMBOL	VARIABLE NAME	ARRAY DIMENSION	DEFINITION	UNITS	PLAIN FLAPS	SINGLE SLOTTED FLAPS	FOWLER FLAPS	DOUBLE SLOTTED FLAPS	SPLIT FLAPS	LEADING EDGE FLAP	LEADING EDGE SLATS	KRUEGER FLAP	JET FLAPS
	FTYPE	–	= 1.0 PLAIN FLAPS	–	●								●
			= 2.0 SINGLE SLOTTED FLAPS			●							●△2
			= 3.0 FOWLER FLAPS				●						●
			= 4.0 DOUBLE SLOTTED FLAPS					●					●
			= 5.0 SPLIT FLAPS						●				
			= 6.0 LEADING EDGE FLAP							●			
			= 7.0 LEADING EDGE SLATS								●		
			= 8.0 KRUEGER									●	●
	NDELTA	–	NUMBER OF FLAP OR SLAT DEFLECTION ANGLES, MAX 9	–	●	●	●	●	●	●	●	●	●
δ_f	DELTA	9	FLAP DEFLECTION ANGLE MEASURED STEAMWISE	DEG	●	●	●	●	●	●	●	●	
$\tan(\phi_{TE}/2)$	PHETE	–	TANGENT OF AIRFOIL TRAILINE EDGE ANGLE BASED ON ORDINATES AT 90 AND 99 PERCENT CHORD	–	●	●	●	●	●				
$\tan(\phi_{TE}/2)$	PHETEP	–	TANGENT OF AIRFOIL TRAILING EDGE ANGLE BASED ON ORDINATES AT 95 AND 99 PERCENT CHORD	–	●	●	●	●	●				
C_{f_i}	CHRDFI	–	FLAP CHORD AT INBOARD END OF FLAP, MEASURED PARALLEL TO LONGITUDINAL AXIS	ℓ	●	●	●	●	●	●	●	●	●
C_{f_o}	CHRDFO	–	FLAP CHORD AT OUTBOARD END OF FLAP, MEASURED PARALLEL TO LONGITUDINAL AXIS	ℓ	●	●	●	●	●	●	●	●	●
b_i	SPANFI	–	SPAN LOCATION OF INBOARD END OF FLAP, MEASURED PERPENDICULAR TO VERTICAL PLANE OF SYMMETRY	ℓ	●	●	●	●	●	●	●	●	●
b_o	SPANFO	–	SPAN LOCATION OF OUTBOARD END OF FLAP, MEASURED PERPENDICULAR TO VERTICAL PLANE OF SYMMETRY	ℓ	●	●	●	●	●	●	●	●	●
c_i'	CPRMEI	9	TOTAL WING CHORD AT INBOARD END OF FLAP (TRANSLATING DEVICES ONLY) MEASURED PARALLEL TO LONGITUDINAL AXIS	ℓ		●	●	●			●	●	●
c_o	CPRMEO	9	TOTAL WING CHORD AT OUTBOARD END OF FLAP (TRANSLATING DEVICES ONLY) MEASURED PARALLEL TO LONGITUDINAL AXIS	ℓ		●	●	●			●	●	●
C'_{a_I}	CAPINB	9		ℓ				●					
C_{a_O}	CAPOUT	9		ℓ				●					
$(\delta_f)_2$	DOBDEF	9		ℓ				●					
C_{2_I}	DOBCIN	–		ℓ				●					
C_{2_O}	DOBCOT	–		ℓ				●					
△1 ΔC_ℓ	SCLD	9	INCREMENT IN SECTION LIFT COEFFICIENT DUE TO DEFLECTING FLAP TO THE ANGLE δ_f										
△1 ΔC_{m_f}	SCMD	9	INCREMENT IN SECTION PITCHING MOMENT COEFFICIENT DUE TO DEFLECTING FLAP TO ANGLE δ_f										
c_b	CB	–	AVERAGE CHORD OF THE BALANCE	ℓ	●								
t_c	TC	–	AVERAGE THICKNESS OF THE CONTROL AT HINGE LINE	ℓ	●								
	NTYPE	–	= 1.0 ROUND NOSE FLAP = 2.0 ELLIPTIC NOSE FLAP = 3.0 SHARP NOSE FLAP	–	●								
	JETFLP	–	= 1.0 PURE JET FLAP = 2.0 IBF = 3.0 EBF = 4.0 COMBINATION MECHANICAL AND PURE JET FLAP	–									●
C_μ	CMU	–	TWO-DIMENSIONAL JET EFFLUX COEFFICIENT	–									●
δ_j	DELJET	9	JET DEFLECTION ANGLE	DEG									●
δ_{jeff}	EFFJET	9	EBF EFFECTIVE JET DEFLECTION ANGLE	DEG									●

△1 OPTIONAL FOR ALL FLAP TYPES
△2 MECHANICAL FLAP TYPE IF JETFLP = 4

FIGURE 16 INPUT FOR NAMELIST SYMFLP – SYMETRICAL FLAP DEFLECTION INPUTS

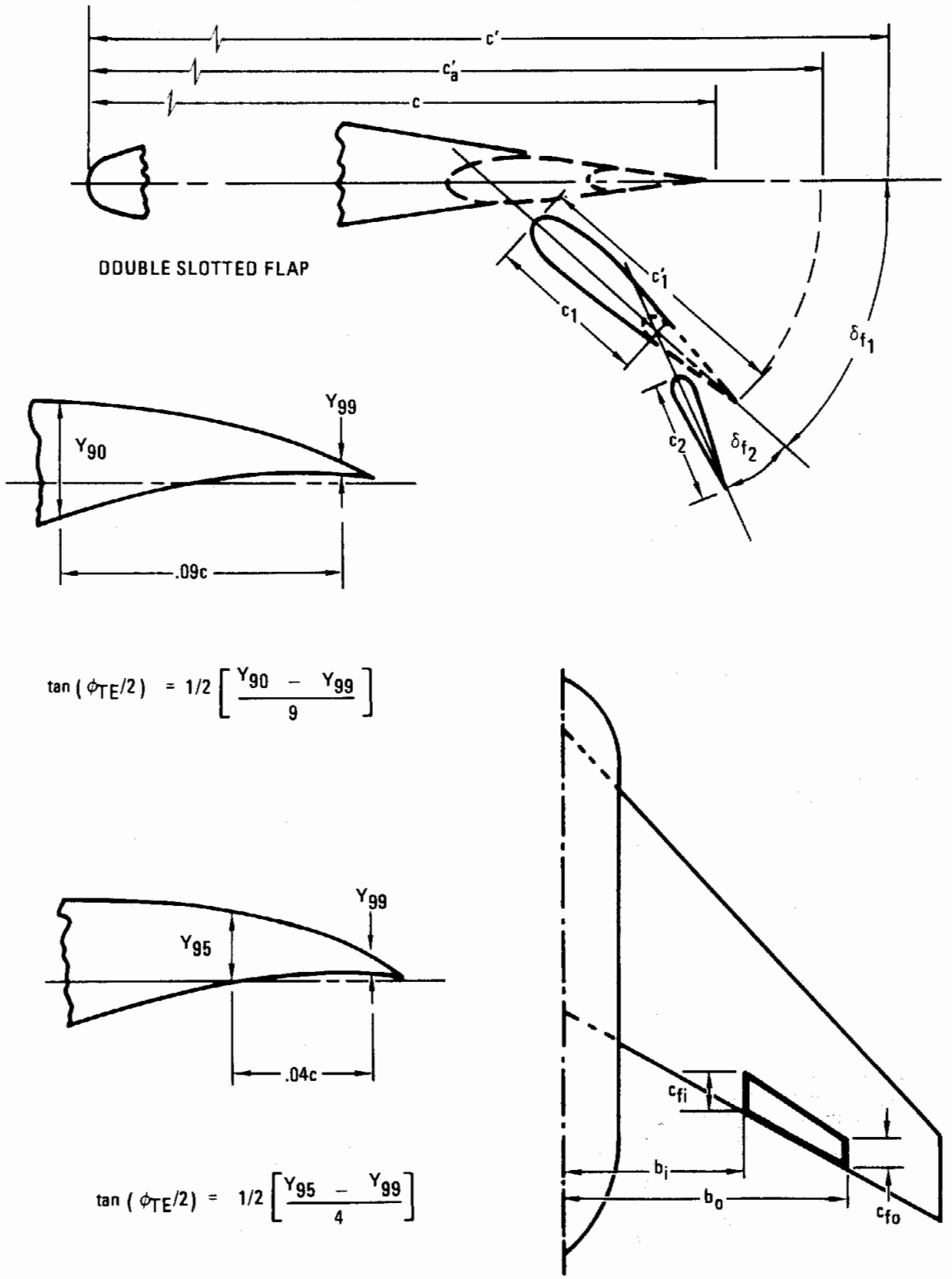

FIGURE 17 SYMMETRICAL FLAP INPUT DEFINITIONS

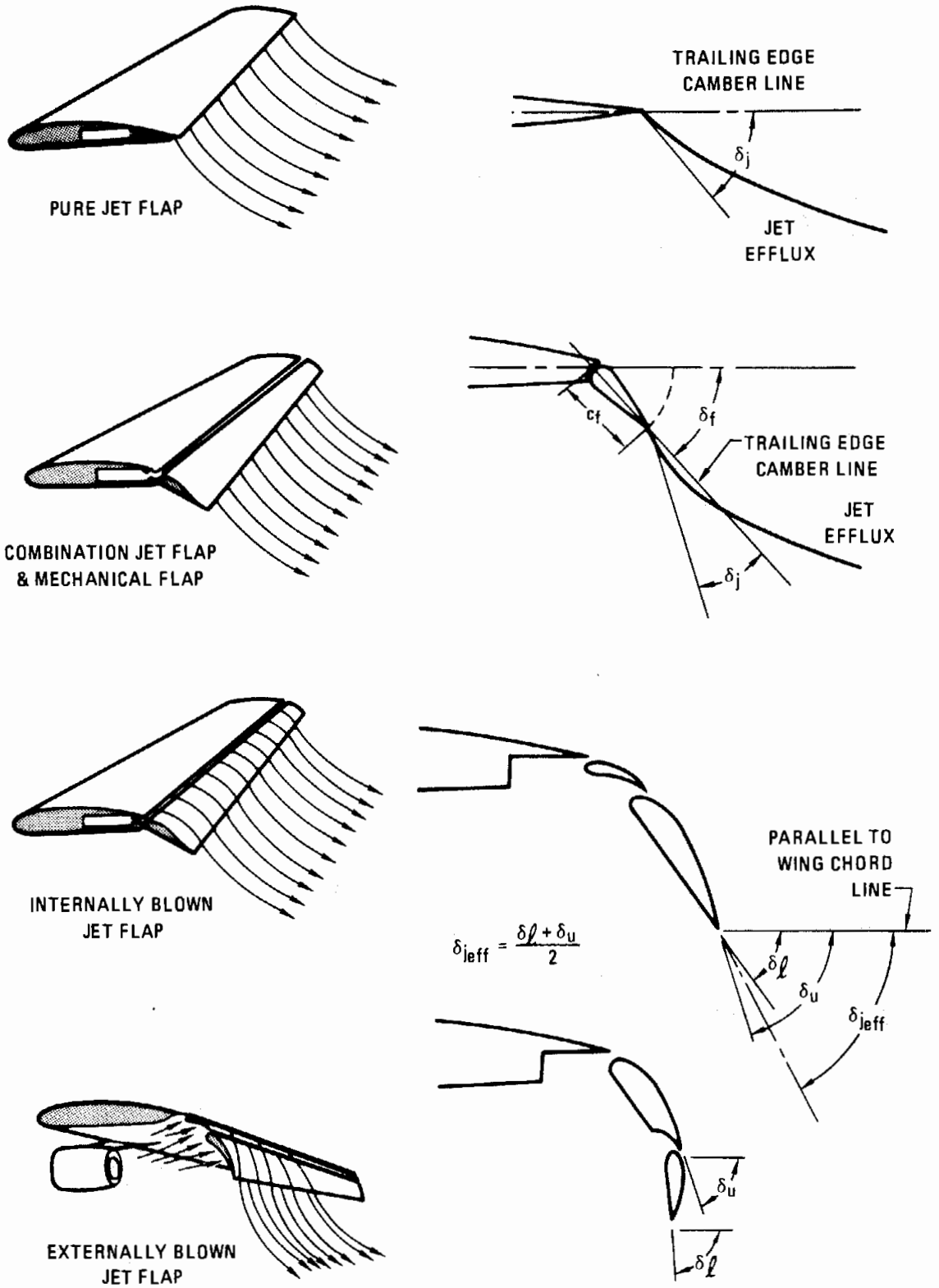

FIGURE 18 JET FLAP INPUT DEFINITIONS

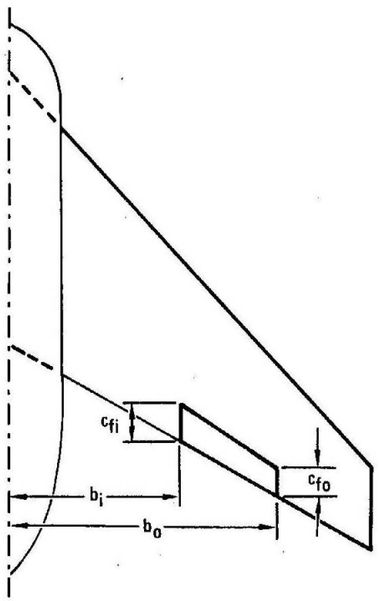

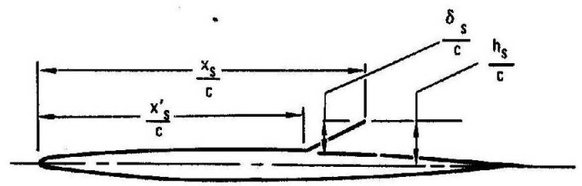

FLAP SPOILER

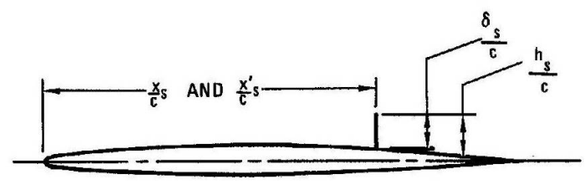

PLUG SPOILER

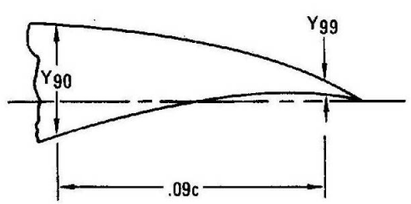

$$\tan(\phi_{TE/2}) = 1/2 \left[\frac{Y_{90} - Y_{99}}{9} \right]$$

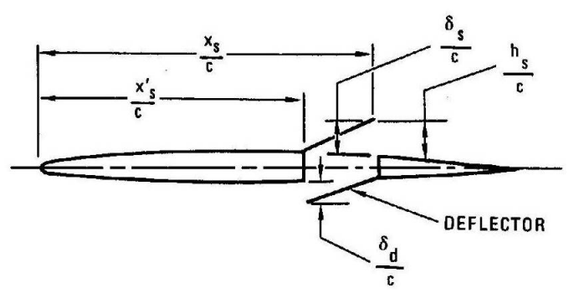

SPOILER-SLOT-DEFLECTOR

FIGURE 19 INPUT FOR NAMELIST ASYFLP – ASYMMETRICAL CONTROL DEFLECTION INPUT

ENGINEERING SYMBOL	VARIABLE NAME	ARRAY DIMENSION	DEFINITION	UNITS	VARIABLES REQUIRED PER CONTROL TYPE: FLAP SPOILER ON WING	PLUG SPOILER ON WING	SPOILER-SLOT-DEFLECTOR ON WING	PLAIN FLAP AILERON	ALL MOVEABLE HORIZONTAL TAIL
	STYPE	–	= 1.0 FLAP SPOILER ON WING	–	●				
			= 2.0 PLUG SPOILER ON WING			●			
			= 3.0 SPOILER-SLOT-DEFLECTION ON WING				●		
			= 4.0 PLAIN FLAP AILERON					●	
			= 5.0 DIFFERENTIALLY DEFLECTED ALL MOVEABLE HORIZONTAL TAIL						●
	NDELTA	–	NUMBER OF CONTROL DEFLECTION ANGLES; REQUIRED FOR ALL CONTROLS, MAX. OF 9	–	●	●	●	●	●
b_i	SPANFI	–	SPAN LOCATION OF INBOARD END OF FLAP OR SPOILER CONTROL, MEASURED PERPENDICULAR TO VERTICAL PLANE OF SYMMETRY	ℓ	●	●	●	●	
b_o	SPANFϕ	–	SPAN LOCATION OF OUTBOARD END OF FLAP OR SPOILER CONTROL, MEASURED TO PERPENDICULAR TO VERTICAL PLANE OF SYMMETRY	ℓ	●	●	●	●	
$\tan(\phi_{TE/2})$	PHETE	–	TANGENT OF AIRFOIL TRAILING EDGE ANGLE BASED ON ORDINATES AT x/c = 0.90 AND 0.99	–	●	●	●	●	
δ_L	DELTAL	9	DEFLECTION ANGLE FOR LEFT HAND PLAIN FLAP AILERON OR LEFT HAND PANEL ALL MOVEABLE HORIZONTAL TAIL, MEASURED IN VERTICAL PLANE OF SYMMETRY	DEG	●	●	●		●
δ_R	DELTAR	9	DEFLECTION ANGLE FOR RIGHT HAND PLAIN FLAP AILERON OR RIGHT HAND PANEL ALL MOVEABLE HORIZONTAL TAIL, MEASURED IN VERTICAL PLANE OF SYMMETRY	DEG	●	●	●	●	●
c_{f_i}	CHRDFI	–	AILERON CHORD AT INBOARD END OF PLAIN FLAP AILERON, MEASURED PARALLEL TO LONGITUDINAL AXIS	ℓ				●	
c_{f_o}	CHRDFϕ	–	AILERON CHORD AT OUTBOARD END OF PLAIN FLAP AILERON, MEASURED PARALLEL TO LONGITUDINAL AXIS	ℓ				●	
$\frac{\delta_d}{c}$	DELTAD	9	PROJECTED HEIGHT OF DEFLECTOR, SPOILER-SLOT-DEFLECTOR CONTROL; FRACTION OF CHORD	–			●		
$\frac{\delta_s}{c}$	DELTAS	9	PROJECTED HEIGHT OF SPOILER, FLAP SPOILER, PLUG SPOILER AND SPOILER-SLOT-DEFLECTOR CONTROL; FRACTION OF CHORD	–	●	●	●		
$\frac{x_s}{c}$	XSϕC	9	DISTANCE FROM WING LEADING EDGE TO SPOILER LIP MEASURED PARALLEL TO STREAMWISE WING CHORD, FLAP AND PLUG SPOILERS; FRACTION OF CHORD	–	●	●			
$\frac{x'_s}{c}$	XSPRME	–	DISTANCE FROM WING LEADING EDGE TO SPOILER HINGE LINE MEASURED PARALLEL TO STREAMWISE WING CHORD, FLAP SPOILER, PLUG SPOILER AND SPOILER-SLOT-DEFLECTOR CONTROL; FRACTION OF CHORD	–	●	●	●		
$\frac{h_s}{c}$	HSϕC	9	PROJECTED HEIGHT OF SPOILER MEASURED FROM AND NORMAL TO AIRFOIL MEAN LINE, FLAP SPOILER, PLUG SPOILER AND SPOILER-SLOT-REFLECTOR; FRACTION OF CHORD	–	●	●	●		

NAMELIST LARWB

SHARP LEADING EDGE

INPUT PARAMETER - $\delta_{e_\perp}$ NOT REQUIRED IF LEADING EDGE IS ROUND

$\delta_{e_\perp}$ = EFFECTIVE WEDGE ANGLE OF SHARP LEADING EDGE WING, PERPENDICULAR TO LEADING EDGE AT $c_r/3$ FROM NOSE, DEGREES

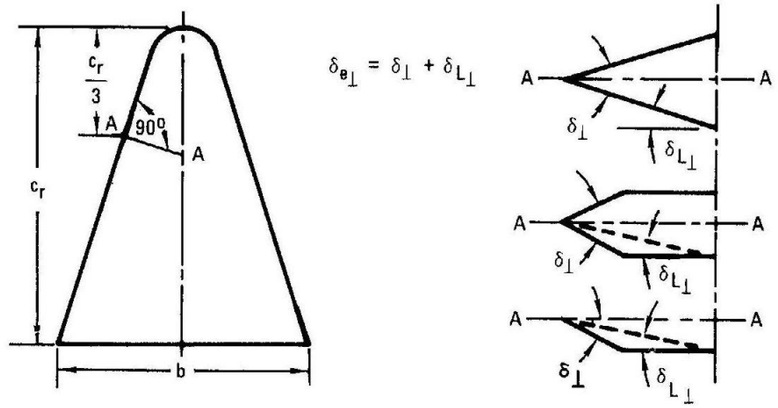

ROUND LEADING EDGE

INPUT PARAMETERS: $\left(\frac{R_1}{3}\text{ LE}\right)/b$ AND δ_L (NOT REQUIRED IF LEADING EDGE IS SHARP).

$\left(\frac{R_1}{3}\text{ LE}\right)/b$ = EFFECTIVE RADIUS OF ROUND LEADING EDGE WING, PERPENDICULAR TO LEADING EDGE AT $c_r/3$ FROM NOSE, DEGREES DIVIDED BY SURFACE SPAN

δ_L = LOWER SURFACE ANGLE OF ROUND LEADING EDGED WING, PERPENDICULAR TO WING LEADING EDGE AT $c_r/3$ FROM NOSE, DEGREES

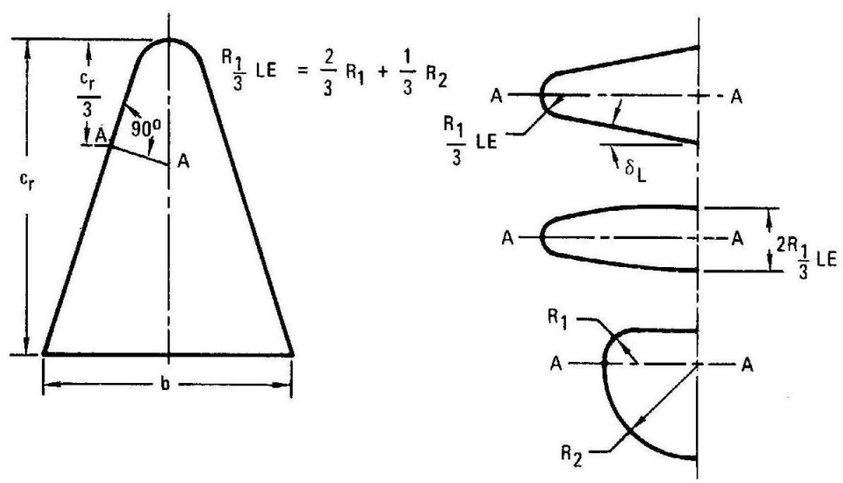

FIGURE 20 INPUT FOR NAMELIST LARWB - LOW ASPECT RATIO WING, WING-BODY INPUT

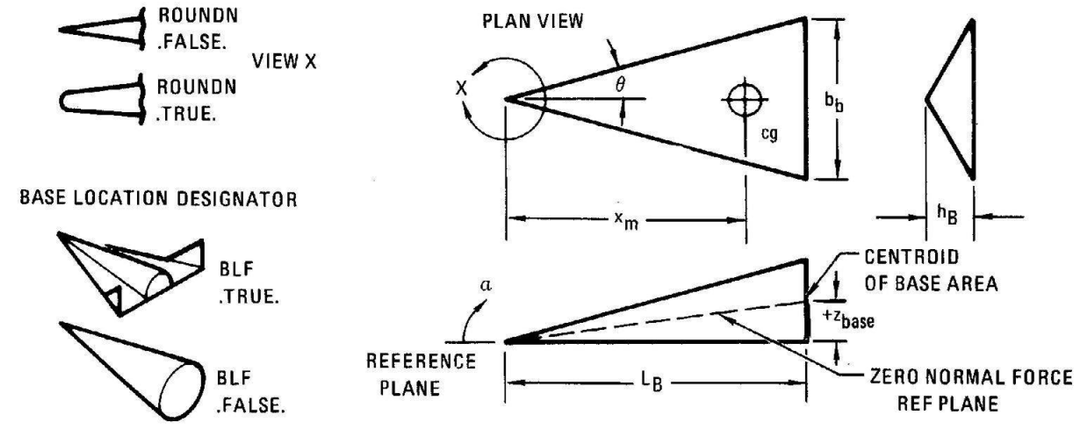

ENGINEERING SYMBOL	VARIABLE NAME	ARRAY DIMENSION	DEFINITION	UNITS
z_{base}	ZB	–	VERTICAL DISTANCE BETWEEN CENTROID OF BASE AREA AND BODY REF PLANE	ℓ
S	SREF	–	PLANFORM AREA USED AS REFERENCE AREA	A
$\delta_{e_\perp}$	DELTEP	–	SHARP LEADING EDGE PARAMETER	DEG
S_F	SFRØNT	–	PROJECTED FRONTAL AREA PERPENDICULAR TO ZERO NORMAL FORCE REF PLANE	A
A	AR	–	ASPECT RATIO OF SURFACE	–
$(R_{1/3}\text{ LE})/b$	R3LEØB	–	ROUND LEADING EDGE PARAMETER	–
δ_L	DELTAL	–	ROUND LEADING EDGE PARAMETER	DEG
ℓ_B	L	–	LENGTH OF BODY USED AS LONGITUDINAL REF LENGTH	ℓ
S_{wet}	SWET	–	WETTED AREA, EXCLUDING BASE AREA	A
P	PERBAS	–	PERIMETER OF BASE	ℓ
S_b	SBASE	–	BASE AREA	A
h_b	HB	–	MAXIMUM HEIGHT OF BASE	ℓ
b_b	BB	–	MAXIMUM SPAN OF BASE USED AS LATERAL REF LENGTH	ℓ
BASE LOCATION DESIGNATOR	BLF	–	.TRUE. PORTIONS OF BASE ARE AFT OF NON-LIFTING SURFACE .FALSE. TOTAL BASE AFT OF LIFING SURFACE	–
x_m	XCG	–	LONGITUDINAL LOCATION OF CG FROM NOSE	ℓ
θ	THETAD	–	WING SEMI-APEX ANGLE	DEG
NOSE BLUNTNESS DESIGNATOR	RØUNDN	–	.TRUE. – ROUNDED NOSE .FALSE. – POINTED NOSE	–
S_{B_S}	SBS	–	PROJECTED SIDE AREA OF CONFIGURATION	A
$(S_{B_S})_{.2\ell_B}$	SBSLB	–	PROJECTED SIDE AREA OF CONFIGURATION FORWARD OF $.2\ell_B$	A
$x_{centroid_{S_{B_S}}}$	XCENSB	–	DISTANCE FROM NOSE OF VEHICLE TO CENTROID OF PROJECTED SIDE AREA	ℓ
$x_{centroid_W}$	XCENW	–	DISTANCE FROM NOSE OF CONFIGURATION TO CENTROID OF PLAN AREA	ℓ

NAMELIST TRNJET

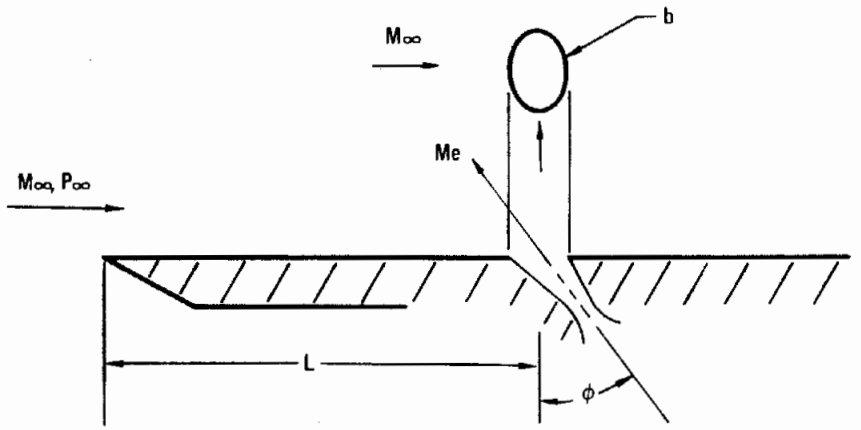

ENGINEERING SYMBOL	VARIABLE NAME	ARRAY DIMENSION	DEFINITION	UNITS
	NT	–	NUMBER OF TIME HISTORY VALUES, MAXIMUM OF 10	–
t	TIME	10	TIME HISTORY	t
F_c	FC	10	TIME HISTORY OF CONTROL FORCE REQUIRED TO TRIM	F
α_∞	ALPHA	10	TIME HISTORY OF ATTITUDE	DEG
	LAMNRJ	10	TIME HISTORY OF BOUNDARY LAYER, WHERE = .TRUE.–BOUNDARY LAYER IS LAMINAR AT JET = .FALSE.–BOUNDARY LAYER IS TURBULENT AT JET	–
b	SPAN	–	SPAN OF NOZZLE NORMAL TO FLOW DIRECTION	ℓ
ϕ	PHE	–	INCLINATION OF NOZZLE CENTER LINE RELATIVE TO AN AXIS NORMAL TO SURFACE	DEG
M_e	ME	–	NOZZLE EXIT MACH NUMBER	–
I_{sp}	ISP	–	JET VACUUM SPECIFIC IMPULSE	t
c	CC	–	NOZZLE DISCHARGE COEFFICIENT	–
γ	GP	–	SPECIFIC HEAT RATIO OF PROPELLANT	–
L	LFP	–	DISTANCE OF NOZZLE FROM PLATE LEADING EDGE	ℓ

FIGURE 21 INPUT FOR NAMELIST TRNJET – TRANSVERSE-JET CONTROL INPUT

NAMELIST HYPEFF

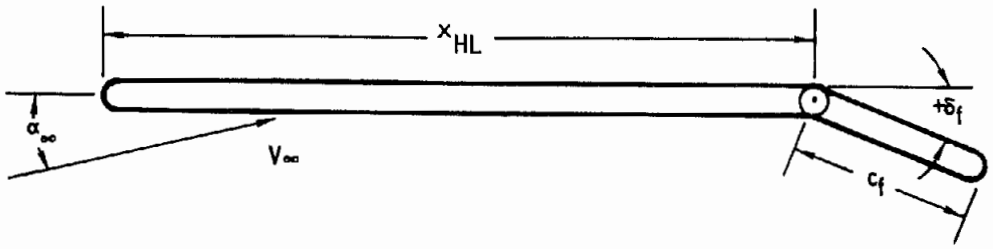

ENGINEER SYMBOL	VARIABLE NAME	ARRAY DIMENSION	DEFINITION	UNITS
ALT	ALITD	–	ALTITUDE	ℓ
x_{HL}	XHL	–	DISTANCE TO CONTROL HINGE LINE MEASURED FROM THE LEADING EDGE	ℓ
T_w/T_∞	TWØTI	–	RATIO OF WALL TEMPERATURE TO THE FREE STREAM STATIC TEMPERATURE	–
c_f	CF	–	CONTROL CHORD LENGTH	ℓ
	HNDLTA	–	NUMBER OF FLAP DEFLECTION ANGLES (MAXIMUM OF 10)	–
δ_f	HDELTA	10	CONTROL DEFLECTION ANGLE, POSITIVE TRAILING EDGE DOWN	DEG
	LAMNR	–	= .TRUE.–BOUNDARY LAYER AT HINGE LINE IS LAMINAR = .FALSE.–BOUNDARY LAYER AT HINGE LINE IS TURBULENT	–

FIGURE 22 INPUT FOR NAMELIST HYPEFF – FLAP CONTROL AT HYPERSONIC SPEEDS

TABLE 10 INPUT PARAMETER LIST NAMELIST CØNTAB

ENGR SYMBOL	VARIABLE NAME	DIM.	DEFINITION	CONTROL TAB	TRIM TAB	UNITS
			= 1 TAB CONTROL	X		–
	TTYPE	–	= 2 TRIM TAB		X	
			= 3 BOTH	X	X	
$(C_{fi})_{tc}$	CFITC	–	INBOARD CHORD, CONTROL TAB	X		ℓ
$(C_{fo})_{tc}$	CFØTC	–	OUTBOARD CHORD, CONTROL TAB	X		ℓ
$(bi)_{tc}$	BITC	–	INBDARD SPAN LOCATION CONTROL TAB	X		ℓ
$(bo)_{tc}$	BØTC	–	OUTBOARD SPAN LOCATION CDNTROL TAB	X		ℓ
$(C_{fi})_{tt}$	CFITT	–	INBOARD CHORD, TRIM TAB		X	ℓ
$(C_b)_{tt}$	CFØTT	–	OUTBOARD CHORD, TRIM TAB		X	ℓ
$(b_i)_{tt}$	BITT	–	INBOARD SPAN LOCATION TRIM TAB		X	ℓ
$(b_o)_{tt}$	BØTT	–	OUTBOARD SPAN LOCATION, TRIM TAB		X	ℓ
B_1	B1	–		X		1/DEG
B_2	B2	–				1/DEG
B_3	B3	–				1/DEG
B_4	B4	–			X	1/DEG
D_1	D1	–	SEE TABLE 11	X		1/DEG
D_2	D2	–	FOR DEFINITIONS			1/DEG
D_3	D3	–				1/DEG
Gc_{max}	GCMAX	–		X	X	$1/\ell$
k	KS ⚠1	–		X		F/A-DEG
R_L	RL			X		–
β	BGR	–		X		–
Δr	DELR	–		X		–

⚠1 IF THE SYSTEM HAS A SPRING, KS INPUT, THEN FREE STREAM DYNAMIC PRESSURE IS REQUIRED

TABLE 11 SYMBOL DEFINITION

$A_c = \dfrac{S_{tc}\bar{c}_{tc}}{S_c\bar{c}_c}$

$B_1 = \left(\partial C_{h_c}/\partial\delta_c\right)_{\delta_{tc},\, a_s,\, \delta_{tt}} = (C_{h_\delta})_c$, 1/Deg (Datcom Section 6.1.6.2)

$B_2 = \left(\partial C_{h_c}/\partial\delta_{tc}\right)_{\delta_c, a_s, \delta_{tt}}$, 1/Deg, user input.

$B_3 = \left(\partial C_{h_c}/\partial a_s\right)_{\delta_c, \delta_{tc}, \delta_{tt}}$, $(C_{h_a})_c$, 1/Deg (Datcom Section 6.1.6.1)

$B_4 = \left(\partial C_{h_c}/\partial\delta_{tt}\right)_{\delta_c, \delta_{tc}, a_s}$, 1/Deg, user input.

$\bar{c}(\ )$ surface mean aerodynamic chord (movable surfaces are defined by their area aft of the hinge line, and the MAC is of that area)

$D_1 = \left(\partial C_{h_{tc}}/\partial\delta_c\right)_{\delta_{tc}, a_s}$, 1/Deg (User Input)

$D_2 = \left(\partial C_{h_{tc}}/\partial\delta_{tc}\right)_{\delta_c, a_s} = (C_{h_\delta})_{tc}$, 1/Deg (Datcom Section 6.1.6.2)

$D_3 = \left(\partial C_{h_{tc}}/\partial a_s\right)_{\delta_c, \delta_{tc}} = (C_{h_a})_{tc}$, 1/Deg (Datcom Section 6.1.6.1)

F_c control-column force (pull force is positive)

$G_{c_{max}} = \dfrac{1}{57.3\left(\dfrac{\partial x_c}{\partial\delta_c}\right)_{max}}$ maximum stick gearing user input. If $R_L = 0$, $G_{c_{max}}$ also is zero. In this case input $G_{tc_{max}}$ and $\Delta_r = 1.0$ ($G_{tc_{max}} = G_{c_{max}} * \Delta_r$).

$k = -\left(\dfrac{\partial M_{tc}}{\partial\delta_{tc}}\right)_{spring} \dfrac{1}{S_{tc}\bar{c}_{tc}}$ tab spring effectiveness

TABLE 11 SYMBOL DEFINITION (CONT'D)

q local dynamic pressure

R_1, R_2 shorthand notation for tab and main surface hinge moments and key linkage parameters, obtained from Table 12

R_L aerodynamic boost link ratio, user input. ($R_L \geq 0$). To input $R_L = \infty$, set $R_L < 0$.

$S_{(\ )}$ surface area (movable surfaces are defined by their area aft of the hinge line)

α_s angle of attack of the surface to which the main control surface is attached, Deg

$\beta = \left(\frac{\partial \delta_{tc}}{\partial \delta_c}\right)_{\substack{\text{stick}\\ \text{free}}}$ with $k = \infty$ control-tab gear ratio

$\delta_{(\ )}$ surface deflection, positive for trailing edge down or to the left, Deg

Δ_r = $-\delta_{tc_{max}}/\delta_{c_{max}}$ for a maximum control deflection (the value of Δ_r is positive because $\delta_{tc_{max}}$ and $\delta_{c_{max}}$ Will have opposite signs), user input.

When $R_L = 0$, $\Delta_r = 1.0$.

SUBSCRIPTS

c main control surface

s surface to which the main control surface is attached, i,e, horizontal tail, vertical tail, or wing

tc control tab

tt trim tab

TABLE 12 EQUATIONS FOR R_1 AND R_2

(DATCOM TABLE 6.3.4-b)

SPECIFIC TYPE OF SYSTEM	LINKAGE			R_1	R_2
	R_L	k	β		
GEARED TAB	∞	∞	F *	0	1
PURE DIRECT CONTROL	∞	∞	0	0	1
GEARED SPRING TAB	F	F	F	$\dfrac{(R_L+\Delta_r)}{R_L+\dfrac{B_2}{A_cD_2}-\dfrac{k}{qD_2}(R_L-\beta)}$	$\dfrac{-(k/qD_2)(R_L+\Delta_r)}{R_L+\dfrac{B_2}{A_cD_2}-\dfrac{k}{qD_2}(R_L-\beta)}$
SPRING TAB	F	F	0	$\dfrac{(R_L+\Delta_r)}{R_L+\dfrac{B_2}{A_cD_2}-\dfrac{k}{qD_2}(R_L)}$	$\dfrac{-(k/qD_2)(R_L+\Delta_r)}{R_L+\dfrac{B_2}{A_cD_2}-\dfrac{k}{qD_2}(R_L)}$
PLAIN LINKED TAB	F	0	0	$\dfrac{(R_L+\Delta_r)}{R_L+\dfrac{B_2}{A_cD_2}}$	0
GEARED FLYING TAB	0	F	F	$\dfrac{\Delta_r}{\dfrac{B_2}{A_cD_2}+\dfrac{k}{qD_2}\beta}$	$\dfrac{-(k/qD_2)\,\Delta_r}{\dfrac{B_2}{A_cD_2}+\dfrac{k}{qD_2}\beta}$
SPRING FLYING TAB	0	F	0	$\dfrac{\Delta_r}{\dfrac{B_2}{A_cD_2}}$	$\dfrac{-(k/qD_2)\,\Delta_r}{\dfrac{B_2}{A_cD_2}}$
PURE FLYING TAB	0	0	0	$\dfrac{\Delta_r}{\dfrac{B_2}{A_cD_2}}$	0

* F DENOTES FINITE VALUE

3.5 GROUP IV INPUT DATA

Case control cards are provided to give the user case control and optional input/output flexibility.

All Datcom control cards must start in card Column 1. The control card name cannot contain any embedded blanks, unless the name consists of two words; they are then separated by a single blank. All but the case termination card (NEXT CASE) may be inserted anywhere within a case (including the middle of any namelist). Each control card is defined below and examples of their usage are illustrated in the example problems of Section 7.

3.5.1 Case Control

NAMELIST - When this card is encountered, the content of each applicable namelist is dumped for the case in the input system of units. This option is recommended if there is doubt about the input values being used, especially when the SAVE option has been used.

SAVE - When this control card is present in a case, input data for the case are preserved for use in the following case. Thus, data encountered in the following case will update the saved data. Values not input in the new case will remain unchanged. Use of the SAVE card allows minimum inputs for multiple case jobs. The total number of appearances of all namelists in consecutive SAVE cases cannot exceed 300; this includes multiple appearances of the same namelist. An error message is printed and the case is terminated if the 300 namelist limit is exceeded. Note, if both SAVE and NEXT CASE cards appear in the last input case, the last case will be executed twice.

The NACA, DERIV and DIM control cards are the only control cards affected by the SAVE card; i.e., no other control cards can be saved from case to case.

DIM FT DIM IN DIM M DIM CM	When any of these cards are encountered, the input and output data are specified in the stated system of units. (See Table 8.) DIM FT is the default.

NEXT CASE - When this card is encountered, the program terminates the reading of input data and begins execution of the case. Case data are destroyed following execution of a case, unless a SAVE card is present. The presence of this card behind the last input case is optional.

3.5.2 Execution Control

TRIM - If this card is included in the case input, trim calculations will be performed for each subsonic Mach number within the case. A vehicle may be trimmed by deflecting a control device on the wing or horizontal tail or by deflecting an all-movable horizontal stabilizer.

DAMP - The presence of this card in a case will provide dynamic-derivative results (for addressable configurations) in addition to the standard static-derivative output (see Figure 25).

NACA - This card provides an NACA airfoil section designation (or supersonic airfoil definition) for use in the airfoil section module. It is used in conjunction with, or in place of, the airfoil section characteristics namelists, Figure 8. The airfoil section module calculates the airfoil section characteristics designated in Figure 8, and is executed if either a NACA control card is present or the variable TYPEIN is defined in the appropriate section characteristic namelist (WGSCHR, HTSCHR, VTSCHR or VFSCHR). Note that if airfoil coordinates and the NACA card are specified for the same aerodynamic surface, the airfoil coordinate specification will be used. Therefore, if coordinates have been specified in a previous case and the SAVE option is in effect, TYPEIN must be set equal to "UNUSED" for the presence of an NACA card to be recognized for that aerodynamic surface. The airfoil designated with this card will be used for both panels of cranked or double-delta planforms.

The form of this control card and the required parameters are given below.

Card Column(s)	Input(s)	Purpose
1 thru 4	NACA	The unique letters NACA designate that an airfoil is to be defined
5	Any delimeter	
6	W, H, V, or F	Planform for which the airfoil designation applies; Wing (W), Horizontal Tail (H), Vertical Tail (V), or Ventral Fin (F)

7	Any delimeter	
8	1, 4, 5, 6, S	Type of airfoil section; 1-series (1), 4-digit (4), 5-digit (5), 6-series (6), or supersonic (S)
9	Any delimeter	
10 thru 80	Designation	Input designation; columns are free-field (blanks are ignored)

Only fifteen (15) characters are accepted in the airfoil designation. The vocabulary consists of the numbers zero (0) through nine (9), the letter "A", and the characters ",", ".", "-", and "=". Any characters input that are not in the vocabulary list will be interpreted as the number zero (0).

Section designation input restrictions inherent to the Airfoil Section Module are presented in Table 13.

3.5.3 Output Control

CASEID - This card provides a case identification that is printed as part of the output headings. This identification can be any user defined case title, and must appear in card columns 7 through 80.

DUMP NAME1, NAME2 ... - This card is used to print the contents of the named arrays in the foot-pound-second system of units. The arrays that can be listed and definition of their contents are given in Appendix C. For example, if the control card read was "DUMP FLC, A " the flight conditions array FLC and the wing array A would be printed prior to the conventional output. If more names are desired than can fit in the available space on one card, additional dump cards may be included.

DUMP CASE - This card is similar to the "DUMP NAME1, ..." control card. When this card is present in a case, all the arrays (defined in Appendix C) that are used during case execution are printed prior to the conventional output. The values in the arrays are in the foot-pound-second system of units.

DUMP INPT - This card is similar to the "DUMP CASE" card except that it forces a dump of all input data blocks used for the case.

DUMP IØM - This card is similar to the "DUMP CASE" card except that all the output arrays for the case are dumped.

TABLE 13 AIRFOIL DESIGNATION USING THE NACA CONTROL CARD

INPUT NACA DESIGNATION	NACA SERIES AIRFOIL	RESTRICTIONS
0012	4–DIGIT	NONE
0012.25	4–DIGIT	NONE (NOTE: THICKNESS CAN BE FRACTIONAL ONLY FOR 4–DIGIT SERIES)
23118	5–DIGIT	NONE
2406–32	4–DIGIT MODIFIED	POSITION OF MAXIMUM THICKNESS MUST BE AT 20, 30, 40, 50 OR 60% CHORD
43006–65	5–DIGIT MODIFIED	POSITION OF MAXIMUM THICKNESS MUST BE AT 20, 30, 40, 50 OR 60% CHORD
16–212	1–SERIES	X FOR MINIMUM PRESSURE MUST BE .6, .8 OR .9
64–005 64–205 A=0.6 63A005 652A215 A=0.6 65,2A215 A=0.6	6–SERIES	X FOR MINIMUM PRESSURE MUST BE .3, .4, .5 OR .6 (NOTE: THE PROGRAM DOES NOT DISTINGUISH BETWEEN A 64, 2–210 AND A 64_2–210. DIFFERENCE IN COORDINATES BETWEEN THE TWO DESIGNATIONS IS NEGLIGIBLE)
S–3–30.0–2.5–40.1 (1) (2) (3) (4)	SUPERSONIC	(1) SECTION TYPE 1 = DOUBLE WEDGE 2 = CIRCULAR ARC 3 = HEXAGONAL (2) DISTANCE FROM L.E. TO MAX THICKNESS, % CHORD (3) MAX. THICKNESS, % CHORD (4) FOR HEXAGONAL SECTIONS, LENGTH OF SURFACE AT CONSTANT THICKNESS, % CHORD (NOTE: ALL PARAMETERS CAN BE EXPRESSED TO 0.1%; "–" DELIMETER MUST BE USED)

DUMP ALL - This card is similar to the "DUMP CASE" card. Its use dumps all program arrays, even if not used for the case.

DERIV RAD - This card causes the static and dynamic stability derivatives to be output in radian measure. The output will be in degree measure unless this flag is set. The flag remains set until a DERIV DEG control card is encountered, even if "NEXT CASE" cards are subsequently encountered.

DERIV DEG - This card causes the static and dynamic stability derivatives to be output in degree measure. The remaining characteristics of this control card are the same as the DERIV RAD card. DERIV DEG is the default.

PART - This card provides auxiliary and partial outputs at each Mach number in the case (see Section 6.1.8). These outputs are automatically provided for all cases at transonic Mach numbers.

BUILD - This control card provides configuration build-up data. Conventional static and dynamic stability data are output for all of the applicable basic configuration combinations shown in Table 2.

PLØT - This control card causes data generated by the program to be written to logical unit 13, which can be retained for input to the Plot Module (described in Volume III). The format of this plot file is described in Section 5 of Volume III.

3.6 REPRESENTATIVE CASE SETUP

Figures 23 and 24 illustrate a typical case setup utilizing the namelists and control cards described. Though namelists (and control cards) may appear in any order (except for NEXT CASE), users are encouraged to provide inputs in the data groups outlined in this section in order to avoid one of the most common input errors - neglecting an important namelist input. The user's kit (Appendix D) has been designed to assist the user in eliminating many common input errors, and its use is encouraged.

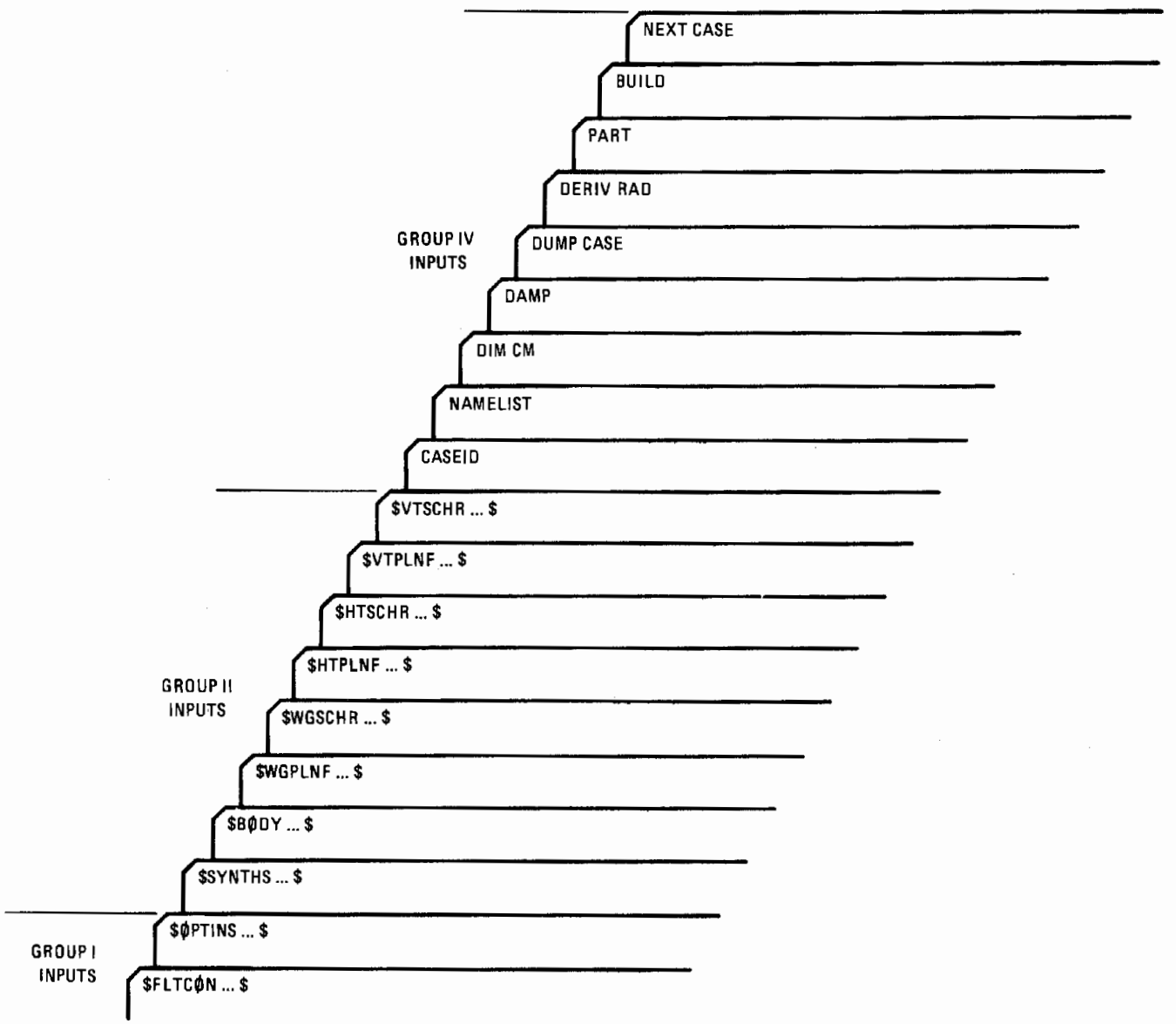

FIGURE 23 TYPICAL "CASE" SETUP

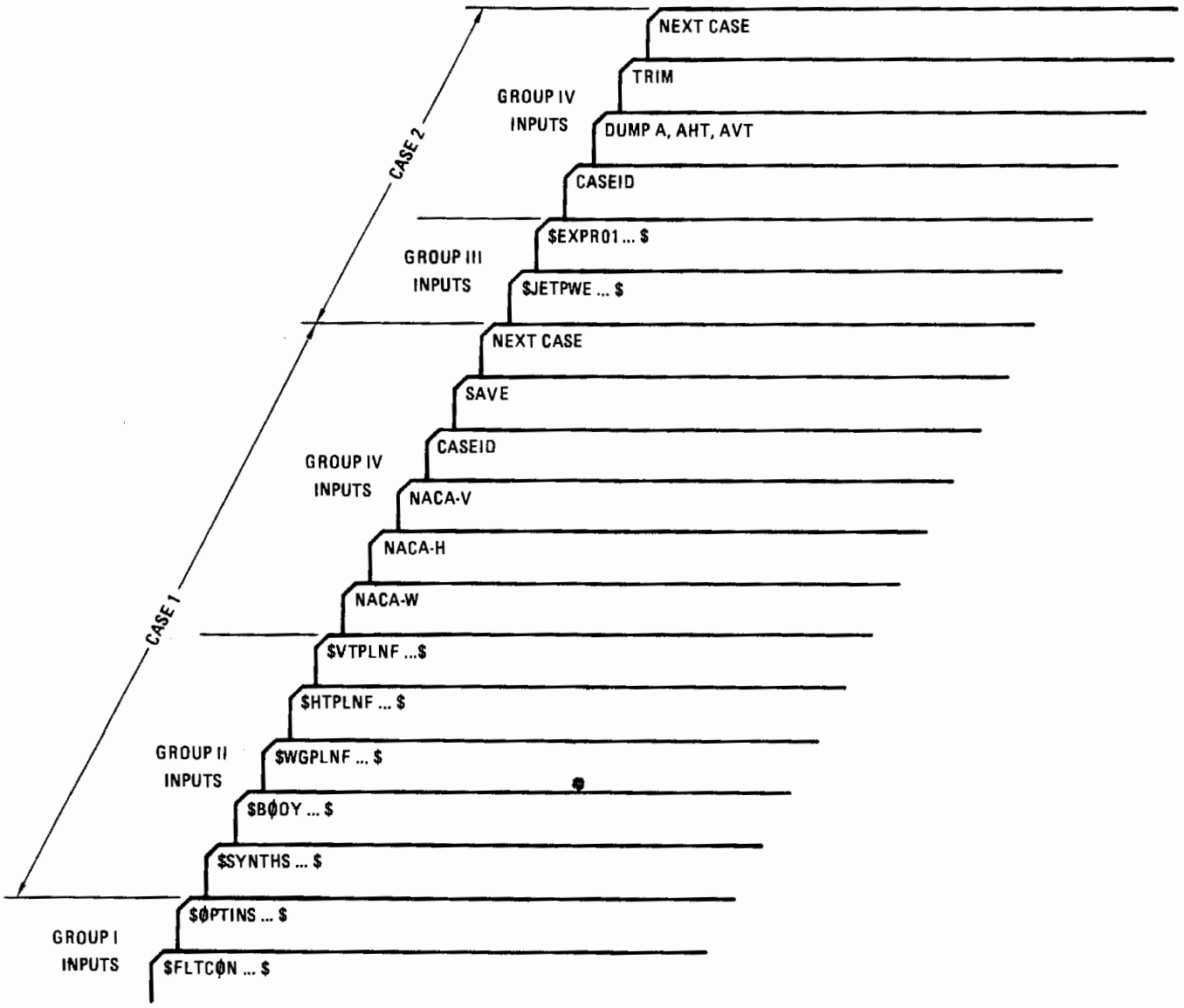

FIGURE 24 TYPICAL "STACKED CASE" SETUP

SECTION 4

BASIC CONFIGURATION MODELING TECHNIQUES

4.1 COMPONENT CONFIGURATION MODELING

Use of the Datcom methods requires engineering judgement and experience to properly model a configuration and interpret results. The same holds true in the use of the Digital Datcom program. As a convenience to the user, the program performs intermediate geometric computations (e.g., area and aspect ratio) required in method applications. The user can retrieve the values used for key geometric parameters by means of the PART and/or DUMP options, Section 3.5. The geometric inputs to the Digital Datcom program are relatively simple except for the judgement required in best representing a particular configuration. This section describes some geometry modeling techniques to appropriately model a configuration.

4.1.1 Body Modeling

The basic body geometry parameters required (regardless of speed regime) consist of the longitudinal coordinates, x_i, with corresponding planform half widths, R_i, peripheries, P_i, and/or cross-sectional areas, S_i. These values are usually used in a linear sense (e.g., the trapezoidal rule is used to integrate for planform area, $S_p = 2 \int_0^{x_n} R_i' \, dx$). This implies that body-shape parameters are linearly connected. However, geometric derivatives, such as $(dS/dx)_i$, are obtained from quadratic interpolations. Proper modeling techniques which reflect a knowledge of method implementation, when used in conjunction with the PART and DUMP options, greatly enhance the program capability and accuracy.

Body methods for lift-curve slope, pitching-moment slope and drag coefficient in the transonic, supersonic, and hypersonic speed regimes require the body to be synthesized from a combination of body segments. The body segments consist of a nose segment, an afterbody segment, and a tail segment. However, in these speed regimes, lift and pitching-moment coefficients versus angle of attack are defined as functions of the body planform characteristics, and therefore are not necessarily a function of the body-segment parameters.

The program performs the configuration synthesis computations as described below. The body input parameters R, P, and S (defined in Figure 6) can reflect actual body contours. Digital Datcom will interpolate the R

array at $X = \ell_N$, $X = \ell_N + \ell_a$, and the last input X for d_N, d_1, and d_2, respectively. Using the shape parameters B_{nose} and B_{tail} it will synthesize an "equivalent" body from the various possibilities shown in Figure 6. For example, in the center body $X = \ell_N$ to $X = \ell_N + \ell_a$ will be treated as a cylinder with a fineness ratio of $2\ell_a/(d_N+d_1)$, the nose will be the shape specified by B_{nose} with a fineness ratio of ℓ_N/d_N, etc. Thus, it is up to the user to choose ℓ_N, ℓ_a, B_{nose}, and B_{tail} to derive a reasonable approximation of the actual body.

Digital Datcom requires synthesized body configurations to be either nose-alone, nose-afterbody, nose-afterbody-tail, or nose-tail (see Figure 6). The shape of the body segments is restricted as follows: nose and tail shapes must be either an ogive or cone, afterbodies must be cylindrical while tails may be either boattailed or flared. Additional body namelist inputs are required to define these body segments and consist of nose- and tail-shape parameters BNØSE and BTAIL and nose and afterbody length parameters BLN and BLA. In the hypersonic speed regime, the effects of nose bluntness may be obtained by specifying DS, the nose bluntness diameter.

For an example of inputs for BLN (ℓ_N) and BLA (ℓ_A) as required in speed regimes other than subsonic, the reader is directed to Figure 6. Body diameters at the various segment intesections, d_N, d_1, and d_2, are obtained from linear interpolation. The tail length, ℓ_{BT}, is obtained by subtracting segments ℓ_N and ℓ_A from the total body length.

Most Digital Datcom analyses assume bodies are axisymmetric. Users may obtain limited results for cambered bodies of arbitrary cross section by specifying the BØDY namelist optional inputs Z_U and Z_L. This option is restricted to the longitudinal stability results in the subsonic speed regime. At speeds other than subsonic, Z_U and Z_L values are ignored and axisymmetric body results are provided. It is recommended that the reference plane for Z_U and Z_L inputs be chosen near the base area centroid.

The body modeling example problem (Section 7, problem 1) was selected specifically to illustrate modeling techniques and relevant program operations. They include:

- Choice of longitudinal coordinates X_i that reflect body curvature and critical body intersections, i.e., wing-body intersection, and body segmentation, if required.
- Subsonic cambered body modeling.

- o Use of the DUMP option so that key parameters can be obtained with the aid of Appendix C.

4.1.2 Wing/Tail Modeling

Input data for wings, horizontal tail, vertical tails and ventral fins have been classified as either planform data or as section characteristic data, as shown in Figures 7 and 8 of Section 3. Twin-vertical panel planform input data is shown in Figure 15.

Classification of nonstraight-tapered wings and horizontal tails as either cranked (aspect ratio > 3) or double delta (aspect ratio < 3) is relevant to only the subsonic speed regime. In this speed regime, the appropriate lift and drag prediction methods depend on the classification of the lifting surface. Digital Datcom executes subsonic analyses according to the user-specified classification regardless of the surface aspect ratio. However, if the surface is inappropriately designated, a warning message is printed.

Dihedral angle inputs are used primarily in the lateral stability methods. The longitudinal stability methods reflect only the effects of dihedral in the downwash and ground effect calculations. The direct effects of dihedral on the primary lift of horizontal surfaces are not defined in Datcom and are therefore not included in Digital Datcom.

Digital Datcom wing or horizontal tail alone analysis requires the exposed semispan and the theoretical semispan to be set to the same value in namelist WGPLNF and HTPLNF. The input wing root chord should be consistent with the chosen semispan. The reference parameters in namelist ØPTINS should be used to specify reference parameters corresponding to other than the theoretical wing planform. If the reference parameters are not specified, they are evaluated using the theoretical wing inputs and the reference area is set as the wing theoretical area, the longitudinal reference length as the wing mean aerodynamic chord, and the lateral reference length is set as the wing span.

Horizontal tail input parameters SVWB, WVB, and SVHB, as well as vertical tail input parameters SHB, SEXT, and RLPH, are required only for the supersonic and hypersonic speed regimes. They are used in calculation of lateral-stability derivatives. If these data are not input, the program will calculate them, but will fail if any part of the exposed root chord lies off of the body; lateral stability calculations are not performed if this occurs.

Two-dimensional airfoil section characteristic data for wings and tails are input via namelists WGSCHR, HTSCHR, VTSCHR, and VFSCHR, or may be calculated using the airfoil section module. On occasion, the section characteristics cannot be explicitly defined because airfoil sections either vary with span (an average airfoil section may be specified), or the planform is not straight tapered and has different airfoil sections between the panels. In such circumstances, inputs should be estimated after reviewing existing airfoil test data. Sensitivity of program results to the estimated section characteristics can be readily evaluated by performing parametric studies utilizing the SAVE and NEXT CASE options defined in Section 3.5. Users are warned that airfoil sensitivities do exist for low Reynolds numbers, i.e., on the order of 100,000. These namelists can also be used to specify the aspect ratio criteria using "ARCL" (Table 9).

Planform geometry, section characteristic parameters, and synthesis dimensions for twin vertical panels are input via namelist TVTPAN. The effects of such panels are reflected in only the subsonic lateral-stability output. The panels may be located either on the wing or on the horizontal tail.

4.2 MULTIPLE COMPONENT MODELING

Combinations of aerodynamic components must be synthesized in namelist SYNTHS. However, the program makes no cross checks in assembly of components for configuration analysis. The user must confirm the geometry inputs to assure consistency of dimensions and component locations in total configuration representation.

4.2.1 Wing-Body/Tail-Body Modeling

Body values employed in wing-body computations are not the same as body-alone results but are obtained by performing body-alone analysis for that portion of the body forward of the exposed root chord of the wing. User supplied body data, input via the namelist EXPRnn, will be used in lieu of the "nose segment" data calculated. Carryover factors are a function of the ratio of body diameter to wing span, as obtained from the wing input data, i.e., the body diameter is taken as twice the difference of the exposed semispan and the theoretical semispan. Hence, the body radius input in namelist BØDY does not affect the interference parameters.

4.2.2 Wing-Body-Tail Modeling

A conventional "aircraft" configuration is modeled using the body, wing, horizontal tail, and vertical tail modeling techniques previously described. Wing downwash data are required to complete analysis of configurations with a wing and horizontal tail. Subsonic and supersonic downwash data are calculated for straight-tapered wings. For other wing planforms, or at transonic Mach numbers, the downwash data (q_H/q_∞, ϵ, and $d\epsilon/d\alpha$) must be supplied using the experimental data substitution option, though two alternatives are suggested:

a. Actual data, or from a wing-body-tail configuration which has an "equivalent" straight tapered wing, or

b. Defining an "equivalent" straight tapered wing and substituting the wing-body results obtained from the previous Digital Datcom run to obtain the best analytical estimate of the configuration.

Body-canard-wing configurations are simulated using the standard body-wing-tail inputs. The forward surface (canard) is input as the wing, and the aft lifting surface as the horizontal tail. Digital Datcom checks the relative span of the wing and horizontal tail to determine if the configuration is a conventional wing-body-tail or a canard configuration.

4.2.3 Configuration Build-up Considerations

Section 3.5 describes multiple case control cards which simplify inputs for parametric and configuration build-ups. There are a few items to keep in mind. The effect of omitting an input variable or setting its value to zero may not be the same, since all inputs are initialized to "UNUSED," 1.0E-60 for CDC computers. However, the "UNUSED" value may be used to give the effect of an input variable being omitted. For example, if "KSHARP" in namelist WGSCHR was specified in a previous SAVE case, a subsequent case could specify "KSHARP = 1.0E-60" (for CDC computers) which would result in KSHARP being omitted in the subsequent case. In many places Digital Datcom uses the presence of a namelist for program control. For example, the program assumes a body has been input if the namelist BØDY exists in a case. The effects of a presence of a namelist, through case input or a SAVE card, cannot be eliminated even if all input values are set to "UNUSED." The only exception to this rule involves high-lift and control input. Either namelist SYMFLP or ASYFLP may be specified in a case, but not both. In a case

sequence involving namelist SYMFLP and a SAVE card, followed by another case where ASYFLP is specified, the ASYFLP analysis will be performed and the previous SYMFLP input ignored.

4.3 DYNAMIC DERIVATIVES

Digital Datcom computes dynamic derivatives for body, wing, wing-body, and wing-body-tail configurations for subsonic, transonic, and supersonic speeds. In addition, body-alone derivatives are available at hypersonic speeds. There is no special namelist input associated with dynamic derivatives. Use of the DAMP control card discussed in Section 3.5 will initiate computation. If experimental data are input, the dynamic derivative methods will employ the relevant experimental data. Dynamic derivative solutions are provided for basic geometry only, and the effects of high-lift and control devices are not recognized.

The experimental data option of the program permits the user to substitute experimental data for key static stability parameters involved in dynamic derivative solutions such as body C_L, wing-body C_L, etc. Any improvement in the accuracy of these parameters will produce significant improvement in the dynamic stability estimates. Use of experimental data substitution for this purpose is strongly recommended.

4.4 TRIM OPTION

Digital Datcom provides a trim option that allows users to obtain longitudinal trim data. Two types of capability are provided: control device on wing or tail (Section 3.4) and the all-movable horizontal stabilizer. Trim with a control device on the wing or tail is activated by the presence of the namelist SYMFLP (Section 3.4) and TRIM control card (Section 3.5) in the same case. Output consists of aerodynamic increments associated with each flap deflection; similar output is provided at trim deflection angles. The trim output is generated as follows: the undeflected total configuration moment at each angle of attack is compared with the incremental moments generated from SYMFLP input. Once the incremental moment is matched, the corresponding deflection angle is the trim deflection angle. The trim deflection is then used as the independent variable in table look-ups for the remaining increments, such as C_L and C_{D_i}. The user should specify a liberal range of flap deflection angles when using the control device trim option.

4.5 SUBSTITUTION OF EXPERIMENTAL DATA

Users have the option of substituting certain experimental data that will be used in lieu of Digital Datcom results. The experimental data are used in subsequent configuration analyses, e.g., body data are used in the wing-body and wing-body-tail calculations. Experimental data are input via namelist EXPRnn, Figure 11. All specified parameters must be based on the same reference area and length used by Digital Datcom.

In the transonic Mach regime, some Datcom methods are available that require user supplied data to complete the calculations. For example, Datcom methods are given that define wing C_{ℓ_β}/C_L and $C_{D_L}/C_L{}^2$ although methods are not available for C_L. If the wing lift coefficient is supplied using experimental data substitution, C_{ℓ_β} and C_D can be calculated at each angle of attack for which C_L is given. The additional transonic data that can be calculated, and the "experimental" data required, are defined in Figure 10.

SECTION 5

ADDITIONAL CONFIGURATION MODELING TECHNIQUES

5.1 HIGH-LIFT AND CONTROL CONFIGURATIONS

Control-device input data for symmetrical and asymmetrical deflections are contained in namelist SYMFLP and ASYFLP, respectively. Analysis is limited to either symmetrical or asymmetrical results in any one case. Multiple case runs involving SAVE cards, may interchange symmetrical and asymmetrical analyses from case to case. Only one control device, on either the wing or horizontal tail, may be analyzied per case. If a wing or wing-body case is run, flap input automatically refers to the wing geometry. However, if a wing-body-horizontal-tail case is input, flap input data refer to the horizontal tail. Multiple-device analysis must be performed manually by using the experimental-data input option. Symmetrical and asymmetrical flap analyses (namelists SYMFLP and ASYFLP) are not performed in the hypersonic speed regime (hypersonic flap effectiveness inputs are made via namelist HYPEFF). No distinction is made between high lift devices and control devices within the program. For instance, trim data may be obtained with any device for which the pitching moment increment is output, with the exception of leading edge flaps. Jet flap analysis assumes the flaps are on the wing and the increments are for a wing-body configuration.

5.2 POWER AND GROUND EFFECTS

Input parameters required to calculate the effects of propeller power, jet power, and ground proximity on the subsonic longitudinal-stability results are input via namelists PRØPWR, JETPWR, and GRNDEF. The effects of power or ground proximity on the subsonic longitudinal stability results may be obtained for any wing-body or wing-body-horizontal tail-and/or vertical-tail configuration. Output consists of lift, drag, and pitching moment coefficients that include the effects of power or ground proximity. Ground effect output may be obtained at a maximum of ten different ground heights. It should be noted that the effects of ground height usually become negligible when the ground height exceeds the wing span.

The effects of ground proximity on a wing-body configuration with symmetrical flaps can be calculated for as many as nine flap deflections at each ground height. The required data are input via namelists GRNDEF and SYMFLP.

5.3 LOW-ASPECT-RATIO WING OR WING-BODY

The Datcom provides special methods to analyze low aspect ratio wing and wing-body combinations (lifting-body vehicles) in the subsonic speed regime. Parameters required to calculate the subsonic longitudinal and lateral results for lifting bodies are input via namelist LARWB. Digital Datcom output provides longitudinal coefficients C_L, C_D, C_N, C_A, and C_m and the derivatives C_{L_α}, C_{m_α}, C_{Y_β}, and C_{ℓ_β}.

5.4 TRANSVERSE-JET CONTROL EFFECTIVENESS

A flat plate equipped with a transverse-jet control system and corresponding input data requirements for namelist TRNJET is shown in Figure 21. The free stream Mach number, Reynolds number, and pressure are defined via namelist FLTCØN, Figure 3. Estimates for the required control force can be made on the assumption that the center of pressure is at the nozzle. The predicted center of pressure location is calculated by the program and obtained by dumping the JET array. If the calculated center of pressure location disagrees with the assumption, a refinement of input data may be necessary.

5.5 FLAP CONTROL EFFECTIVENESS AT HYPERSONIC SPEEDS

A flat plate with a flap control is shown in Figure 22 along with input namelist HYPFLP. Force and moment data are predicted assumming a two-dimensional flow field. Oblique shock relations are used in describing the flow field.

SECTION 6

DEFINITION OF OUTPUT

Digital Datcom results are output at the Mach numbers specified in namelist FLTCØN. At each Mach number, output consists of a general heading, reference parameters, input error messages, array dumps, and specific aerodynamic characteristics as a function of angle of attack and/or flap deflection angle. Separate output formats are provided for the following sets of related aerodynamic data: static longitudinal and lateral stability, dynamic derivatives, high lift and control, trim option, transverse-jet effectiveness, and control effectiveness at hypersonic speeds. Since computer output is limited symbolically, definitions for the output symbols used within the related output sets are given. The Datcom engineering symbol follows the output symbol notation when appropriate. Unless otherwise noted, all results are presented in the stability axis coordinate system.

6.1 STATIC AND DYNAMIC STABILITY OUTPUT

The primary outputs of Digital Datcom are the static and dynamic stability data for a configuration. An example of this output is shown in Figure 25. Definitions of the output notations are given below.

6.1.1 General Headings

Case identification information is contained in the output heading and consists of the following: the version of Datcom from which the program methodologies are derived, the type of vehicle configuration (e.g. body alone or wing-body) for which aerodynamic characteristics are output, and supplemental user-specified case identification information if the CASEID control card is used.

6.1.2 Reference Parameters

Reference parameters and flight-condition output are defined as follows:

- MACH NUMBER - Mach at which output was calculated. This parameter is user-specified in namelist FLTCØN, or calculated from the altitude and velocity inputs.
- ALTITUDE - Altitude (if user input) at which Reynolds number was calculated. This optional parameter is user specified in namelist FLTCØN.

AUTOMATED STABILITY AND CONTROL METHODS PER APRIL 1976 VERSION OF DATCOM
CHARACTERISTICS AT ANGLE OF ATTACK AND IN SIDESLIP
WING-BODY CONFIGURATION
BODY-WING DAMPING DERIVATIVES

FLIGHT CONDITIONS						REFERENCE DIMENSIONS				
MACH NUMBER	ALTITUDE FT	VELOCITY FT/SEC	PRESSURE LB/FT**2	TEMPERATURE DEG R	REYNOLDS NUMBER 1/FT	REF. AREA FT**2	REFERENCE LENGTH LONG. FT	LAT. FT	MOMENT REF. CENTER HORIZ FT	VERT FT
.600					4.2600E+06	2.250	.822	3.000	2.600	0.000

ALPHA	CD	CL	CM	CN	CA	XCP	CLA	CMA	CYB	CNB	CLB
							DERIVATIVE (PER DEGREE)				
-2.0	.017	-.126	-.0106	-.126	.012	.084	6.285E-02	5.405E-03	-1.702E-03	-1.882E-03	5.532E-04
0.0	.015	0.000	0.0000	0.000	.015	******	6.285E-02	5.222E-03			0.
2.0	.017	.126	.0103	.126	.012	.081	6.317E-02	5.020E-03			-5.532E-04
4.0	.023	.253	.0201	.254	.006	.079	6.348E-02	4.731E-03			-1.112E-03
8.0	.050	.506	.0376	.508	-.021	.074	6.252E-02	3.984E-03			-2.229E-03
12.0	.093	.753	.0519	.756	-.065	.069	5.430E-02	2.924E-03			-3.313E-03
16.0	.139	.941	.0610	.943	-.126	.065	3.708E-02	1.631E-03			-4.141E-03
20.0	.172	1.049	.0650	1.045	-.197	.062	1.522E-02	5.058E-04			-4.619E-03
24.0	.185	1.063	.0650	1.046	-.264	.062	-8.650E-03	-4.958E-04			-4.677E-03

AUTOMATED STABILITY AND CONTROL METHODS PER APRIL 1976 VERSION OF DATCOM
DYNAMIC DERIVATIVES
WING-BODY CONFIGURATION
BODY-WING DAMPING DERIVATIVES

FLIGHT CONDITIONS						REFERENCE DIMENSIONS				
MACH NUMBER	ALTITUDE FT	VELOCITY FT/SEC	PRESSURE LB/FT**2	TEMPERATURE DEG R	REYNOLDS NUMBER 1/FT	REF. AREA FT**2	REFERENCE LENGTH LONG. FT	LAT. FT	MOMENT REF. CENTER HORIZ FT	VERT FT
.600					4.2600E+06	2.250	.822	3.000	2.600	0.000

DYNAMIC DERIVATIVES (PER DEGREE)

	PITCHING		ACCELERATION		ROLLING			YAWING	
ALPHA	CLQ	CMQ	CLAD	CMAD	CLP	CYP	CNP	CNR	CLR
-2.00	3.684E-02	-3.018E-02	NDM	NDM	-5.150E-03	-4.280E-04	1.710E-05	-7.354E-05	-6.158E-04
0.00					-5.144E-03	0.	0.	-6.008E-05	0.
2.00					-5.158E-03	4.277E-04	-1.684E-05	-7.354E-05	6.158E-04
4.00					-5.163E-03	8.653E-04	-3.751E-05	-1.141E-04	1.233E-03
8.00					-5.075E-03	1.801E-03	-1.138E-04	-2.739E-04	2.454E-03
12.00					-4.419E-03	3.059E-03	-4.015E-04	-5.252E-04	3.619E-03
16.00					-3.007E-03	4.696E-03	-9.863E-04	-7.702E-04	4.472E-03
20.00					-1.165E-03	6.594E-03	-1.702E-03	-9.154E-04	4.908E-03
24.00					9.176E-04	8.727E-03	-2.224E-03	-8.941E-04	4.846E-03

*** NDM PRINTED WHEN NO DATCOM METHODS EXIST

FIGURE 25 DIGITAL DATCOM STATIC AND DYNAMIC STABILITY OUTPUT

- VELOCITY - Freestream velocity (if user input) at which Mach number and Reynolds number was calculated. This optional parameter is user specified in namelist FLTCØN.
- PRESSURE - Freestream atmospheric pressure at which output was calculated (function of altitude). This parameter can also be user specified in namelist FLTCØN.
- TEMPERATURE - Freestream atmospheric temperature at which output was calculated (function of altitude). This parameter can also be user specified in namelist FLTCØN.
- REYNOLDS NO. - This flight condition parameter is the Reynolds number per unit length and is user-specified (or computed) in namelist FLTCØN.
- REF. AREA - Digital Datcom aerodynamic characteristics are based on this reference area. It is either user-specified in namelist ØPTINS or is equal to the planform area of the theoretical wing.
- REFERENCE LENGTH - LONG. - The Digital Datcom pitching moment coefficient is based on this reference length. It is either user-specified in namelist ØPTINS or is equal to the mean aerodynamic chord of the theoretical wing.
- REFERENCE LENGTH - LAT. - The Digital Datcom yawing-moment and rolling-moment derivatives are based on this reference length. It is either user-specified in namelist ØPTINS or is set equal to the wing span.
- MOMENT REF. CENTER - The moment reference center location for vehicle moments (and rotations). It is user-specified in namelist SYNTHS and output as X_{CG} (HORIZ) and Z_{CG} (VERT).
- ALPHA - This is the angle-of-attack array that is user specified in namelist FLTCØN. The angles are expressed in degrees.

6.1.3 Static Longitudinal and Lateral Stability

Not all of the static aerodynamic characteristics shown in Figure 25 are calculated for each combination of vehicle configuration and speed regime, because Datcom methods are not always available. Aerodynamic characteristics that are available as output from Digital Datcom are presented in Table 2 as a function of vehicle configuration and speed regime. Additional constraints are imposed on some derivatives; the user should consult the

Methods Summary in Section 1 of the USAF Stability and Control Datcom Handbook. The stability derivatives are expressed per degree or per radian at the users option (see Section 3.5).

- CD - C_D - Vehicle drag coefficient based on the reference area and presented as a function of angle of attack. If Datcom methods are available to calculate C_{D_0} but not to calculate C_D versus α, the value of C_{D_0} is printed as output at the first alpha. C_D is positive when the drag is an aft acting load.
- CL - C_L - Vehicle lift coefficient based on the reference area and presented as a function of angle of attack. C_L is positive when the lift is an up acting load.
- CM - C_m - Vehicle pitching-moment coefficient based on the reference area and longitudinal reference length and presented as a function of angle of attack. Positive pitching moment causes a nose-up vehicle rotation.
- CN - C_N - Vehicle (body axis) normal-force coefficient based on the reference area and presented as a function of angle of attack. C_N is positive when the normal force is in the +Z direction. Refer to Figure 5 for Z-axis definition.
- CA - C_A - Vehicle (body axis) axial-force coefficient based on the reference area and presented as a function of angle of attack. C_A is positive when the axial force is in the +X direction. Refer to Figure 5 for X-axis definition.
- XCP - $X_{c.p.}$ - The distance between the vehicle moment reference center and the center of pressure divided by the longitudinal reference length. Positive $X_{c.p.}$ is a location forward of the center of gravity. If output is given only for the first angle of attack, or for those cases where pitching moment (C_m)is not computed, the value(s) define the aerodynamic-center location; i.e., $X_{c.p.} = dC_m/dC_L = (X_{CG}-X_{ac})/\bar{c}$.
- CLA - C_{L_α} - Derivative of lift coefficient with respect to alpha. If C_{L_α} is output versus angle of attack, these values correspond to numerical derivatives of the lift curve. When a single value of C_{L_α} is output at the first angle of attack, this output is the linear-lift-region derivative. C_{L_α} is based on the reference area.

- CMA - C_{m_α} - Derivative of the pitching-moment coefficient with respect to alpha. If C_{m_α} is output versus angle of attack, the values correspond to numerical derivatives of the pitching-moment curve. When a single value of C_{m_α} is output at the first angle of attack, this output is the linear-lift-region derivative. C_{m_α} is based on the reference area and longitudinal reference length.
- CYB - C_{Y_β} - Derivative of side-force coefficient with respect to sideslip angle. When C_{Y_β} is defined independent of the angle of attack, output is printed at the first angle of attack. C_{Y_β} is based on the reference area.
- CNB - C_{n_β} - Derivative of yawing-moment coefficient with respect to sideslip angle. When C_{n_β} is defined independent of angle of attack, output is printed at the first angle of attack. C_{n_β} is based on the reference area and lateral reference length.
- CLB - C_{ℓ_β} - Derivative of rolling-moment coefficient with respect to sideslip angle presented as a function of angle of attack. C_{ℓ_β} is based on the reference area and lateral reference length.
- Q/QINF - q_H/q_∞ - Ratio of dynamic pressure at the horizontal tail to the freestream value presented as a function of angle of attack. When a single value of q_H/q_∞ is output at the first angle of attack, this output is the linear-lift-region value.
- EPSLON - ϵ_H - Downwash angle at horizontal tail expressed in degrees. Downwash angle has the same algebraic sign as the lift coefficient. Positive downwash implies that the local angle of attack of the horizontal tail is less than the free-stream angle of attack.
- D(EPSLON)/D(ALPHA) - $\partial\epsilon/\partial\alpha$ - Derivative of downwash angle with respect to angle of attack. When a single value of D(EPSLON)/D(ALPHA) is output at the first angle of attack, it corresponds to the linear-lift-region derivative.

6.1.4 Dynamic Derivatives DAMP

Not all of the dynamic derivatives shown in Figure 25 are calculated for each combination of vehicle configuration and speed regime because of Datcom limitations. Aerodynamic characteristics that are available as output from Digital Datcom are presented in Table 2 as a function of vehicle configuration and speed regime. See the Datcom Handbook, Section 1, for additional

restrictions. Dynamic stability derivatives are expressed per degree or per radian at the users option (see Section 3.5).

- o CLQ - $C_{L_q} = \partial C_L/\partial(q\bar{c}/2V_\infty)$ - Vehicle pitching derivative based on the product of reference area and longitudinal reference length.
- o CMQ - $C_{m_q} = \partial C_m/\partial(q\bar{c}/2V_\infty)$ - Vehicle pitching derivative based on the product of reference area and the square of the longitudinal reference length.
- o CLAD - $C_{L_{\dot{\alpha}}} = \partial C_L/\partial(\dot{\alpha}\bar{c}/2V_\infty)$ - Vehicle acceleration derivative based on the product of reference area and longitudinal reference length.
- o CMAD - $C_{m_{\dot{\alpha}}} = \partial C_m/\partial(\dot{\alpha}\bar{c}/2V_\infty)$ - Vehicle acceleration derivative based on the product of reference area and the square of the longitudinal reference length.
- o CLP - $C_{\ell_p} = \partial C_\ell/\partial(pb/2V_\infty)$ - Vehicle rolling derivative based on the product of reference area and the square of the lateral reference length.
- o CYP - $C_{Y_p} = \partial C_Y/\partial(pb/2V_\infty)$ - Vehicle rolling derivative based on the product of reference area and lateral reference length.
- o CNP - $C_{n_p} = \partial C_n/\partial(pb/2V_\infty)$ - Vehicle rolling derivative based on the product of reference area and the square of the lateral reference length.
- o CNR - $C_{n_r} = \partial C_n/\partial(rb/2V_\infty)$ - Vehicle yawing derivative based on the product of reference area and the square of the lateral reference length.
- o CLR - $C_{\ell_r} = \partial C_\ell/\partial(rb/2V_\infty)$ - Vehicle rolling derivative based on the product of reference area and the square of the lateral reference length.

6.1.5 High Lift and Control

This output consists of two basic categories: symmetrical deflection of high lift and/or control devices, and asymmetrical control surfaces. The high lift/control data follow the same sign convention as the static aerodynamic coefficients. Available output is presented in Table 3 as a function of speed regime and control type. Users are urged to consult the Datcom for limitations and constraints imposed upon these characteristics. Output obtained from symmetrical flap analysis are as follows.

- DELTA - δ_f - Control-surface streamwise deflection angle. Positive trailing edge down. Values of this array are user-specified in namelist SYMFLP.
- D(CL) - ΔC_L - Incremental lift coefficient in the linear-lift angle-of-attack range due to deflection of control surface. Based on reference area and presented as a function of deflection angle.
- D(CM) - ΔC_m - Incremental pitching-moment coefficient due to control surface deflection valid in the linear lift angle-of-attack range. Based on the product of reference area and longitudinal reference length. Output is a function of deflection angle.
- D(CL MAX) - $\Delta C_{L_{max}}$ - Incremental maximum-lift coefficient. Based on reference area and presented as a function of deflection angle.
- D(CD MIN) - $\Delta C_{D_{min}}$ - Incremental minimum drag coefficient due to control or flap deflection. Based on reference area and presented as a function of deflection angle.
- D(CDI) - ΔC_{D_i} - Incremental induced-drag coefficient due to flap deflection based on reference area and presented as a function of angle-of-attack and deflection angle.
- (CLA)D - $(C_{L_\alpha})_\delta$ - Lift-curve slope of the deflected, translated surface based on reference area and presented as a function of deflection angle.
- (CH)A - C_{h_α} - Control-surface hinge-moment derivative due to angle of attack based on the product of the control surface area and the control surface chord, $S_c C_c$. A positive hinge moment will tend to rotate the flap trailing edge down.
- (CH)D - C_{h_δ} - Control-surface hinge-moment derivative due to control deflection based on the product of the control surface area and the control surface chord. A positive hinge moment will tend to rotate the flap trailing edge down.

Output obtained from asymmetrical control surfaces are given below. Left and right are related to a forward facing observer:

- DELTAL - δ_L - Left lifting surface streamwise control deflection angle. Positive trailing edge down. Values in this array are user-specified in namelist ASYFLP.

- DELTAR - δ_R - Right lifting-surface streamwise control deflection angle. Positive trailing edge down. Values in this array are user-specified in namelist ASYFLP.
- XS/C - x_s/c - Streamwise distance from wing leading edge to spoiler lip. Values in this array are input via namelist ASYFLP, Figure 19.
- HS/C - h_s/c - Projected height of spoiler measured from and normal to airfoil mean line. Values in this array are input via namelist ASYFLP.
- DD/C - δ_d/c - Projected height of deflector for spoiler-slot-deflector control. Values in this array are input via namelist ASYFLP.
- DS/C - δ_s/c - Projected height of spoiler control. Values in this array are input via namelist ASYFLP.
- (CL) ROLL - C_ℓ - Incremental rolling - moment coefficient due to asymmetrical deflection of control surface based on the product of reference area and lateral reference length. Positive rolling moment is right wing down.
- CN - C_n - Incremental yawing-moment coefficient due to asymmetrical deflection of control surface based on the product of reference area and lateral reference length. Positive yawing moment is nose right.

6.1.6 Trim Option

The Digital Datcom trim option provides subsonic longitudinal characteristics at the calculated trim deflection angle of the control device. The trim calculations assume unaccelerated flight; i.e., the static pitching moment is set to zero without accounting for any contribution from a non-zero pitch rate. Trim output is also provided for an all-movable horizontal stabilizer at subsonic speeds. These data include untrimmed stabilizer coefficients C_D, C_L, C_m, and the hinge moment coefficient; stabilizer trim incidence and trimmed stabilizer coefficients C_D, C_L, C_m, and the hinge-moment coefficient; wing-body-tail C_D and C_L with stabilizer at trim deflection angle. Additional Digital Datcom symbols used in output are as follows:

- HM - Stabilizer hinge-moment coefficient based on the product of reference area and longitudinal reference length. Positive hinge moment will tend to rotate the stabilizer leading edge up and trailing edge down.

o ALIHT - Stabilizer incidence required to trim expressed in degrees. Positive incidence, or deflection, is trailing edge down.

The all-movable horizontal stabilizer trim output is presented as a function of angle of attack

6.1.7 Control [redacted] Speeds

Two types of control analyses are available at hypersonic speeds. They are transverse-jet control and flap effectiveness.

Data output from the hypersonic flap methods are incremental normal- and axial-force coefficients, associated hinge moments, and center-of-pressure location. These data are found from the local pressure distributions on the flap and in regions forward of the flap. The analysis includes the effects of flow separation due to windward flap deflection. This is done by providing estimates for separation induced-pressures forward of the flap and reattachement on the flap. The users may specify laminar or turbulent boundary layers.

The transverse control jet method requires a user-specified time history of local flow parameters and control force required to trim or maneuver. With these data, the minimum jet plenum pressure necessary to induce separation is calculated. This minimum jet plenum pressure is then employed to calculate the nozzle throat diameter and the jet plenum pressure and propellant weight requirements to trim or maneuver the vehicle. Typical output can be seen in example problem 10.

6.1.8 Auxiliary and Partial Output

Auxiliary outputs consist of drag breakdown data, and basic configuration geometric properties. Partial outputs consist of component and vortex interference factors, effect of geometric parameters (e.g., dihedral and wing twist) on static and dynamic characteristics, canard effective downwash, data for transonic fairings and intermediate data that require user supplied data to complete (e.g. C_{ℓ_β}/C_L). Typical output is shown in Figure 26.

6.1.9 Effective Downwash

Datcom methods for configurations where the forward lifting-surface span is less than 1.5 times the aft lifting-surface span do not explicitly provide estimates for either the downwash angle or gradiant. However, Digital Datcom provides "effective" values for these quantities. The canard effective downwash angle and gradient are defined as downwash data required to produce the correct wing-body-tail lift characteristics when applied to conventional

AUTOMATED STABILITY AND CONTROL METHODS PER APRIL 1976 VERSION OF DATCOM
CONFIGURATION AUXILIARY AND PARTIAL OUTPUT
WING-BODY-VERTICAL TAIL-HORIZONTAL TAIL CONFIGURATION
CONFIGURATION BUILDUP, EXAMPLE PROBLEM 3, CASE 1

FLIGHT CONDITIONS					REFERENCE DIMENSIONS				
MACH NUMBER	ALTITUDE FT	VELOCITY FT/SEC	PRESSURE LB/FT**2	TEMPERATURE DEG R	REYNOLDS NUMBER 1/FT	REF. AREA FT**2	REFERENCE LENGTH LONG. FT	LAT. FT	MOMENT REF. HORIZ FT	CENTER VERT FT
.800					6.4000E+06	2.250	.822	3.000	2.600	0.000

BASIC BODY PROPERTIES

WETTED AREA	XCG	ZCG	BASE AREA	ZERO LIFT DRAG	BASE DRAG	FRICTION DRAG	PRESSURE DRAG
.5035E+01	2.60	0.00	.0598	.7579E-02	.1689E-02	.5491E-02	.3995E-03

XCG RELATIVE TO THEORETICAL LEADING EDGE MAC= .20

BASIC PLANFORM PROPERTIES

WING	AREA	TAPER RATIO	ASPECT RATIO	QUARTER CHORD SWEEP	MAC	QUARTER CHORD X(MAC)	Y(MAC)	ZERO LIFT DRAG	FRICTION COEFFICIENT
TOTAL THEORITICAL	.2259E+01	.298	.3984E+01	45.000	.826E+00	.260E+01	.615E+00		
TOTAL EXPOSED	.1796E+01	.331	.3707E+01	45.000	.755E+00	.274E+01	.747E+00	.577E-02	.337E-02
HORIZONTAL TAIL									
TOTAL THEORITICAL	.4509E+00	.602	.3982E+01	45.000	.343E+00	.434E+01	.307E+00		
TOTAL EXPOSED	.3305E+00	.661	.3272E+01	45.000	.322E+00	.443E+01	.392E+00	.124E-02	.394E-02
VERTICAL TAIL									
TOTAL THEORITICAL	.1223E+01	.412	.2358E+01	28.100	.762E+00	.379E+01	.366E+00		
TOTAL EXPOSED	.8797E+00	.485	.1961E+01	28.100	.668E+00	.386E+01	.498E+00	NA	NA

*** NA PRINTED WHEN METHOD NOT APPLICABLE

AUTOMATED STABILITY AND CONTROL METHODS PER APRIL 1976 VERSION OF DATCOM
CONFIGURATION AUXILIARY AND PARTIAL OUTPUT
WING-BODY-VERTICAL TAIL-HORIZONTAL TAIL CONFIGURATION
CONFIGURATION BUILDUP, EXAMPLE PROBLEM 3, CASE 1

FLIGHT CONDITIONS					REFERENCE DIMENSIONS				
MACH NUMBER	ALTITUDE FT	VELOCITY FT/SEC	PRESSURE LB/FT**2	TEMPERATURE DEG R	REYNOLDS NUMBER 1/FT	REF. AREA FT**2	REFERENCE LENGTH LONG. FT	LAT. FT	MOMENT REF. HORIZ FT	CENTER VERT FT
					6.4000E+06	2.250	.822	3.000	2.600	0.000

CLA-B(W)= 7.443E-03 CLA-W(B)= 5.578E-02 K-B(W)= 1.484E-01 K-W(B)= 1.112E+00 XAC/C-B(W)= 6.828E-01
CLA-B(H)= 1.777E-03 CLA-H(B)= 1.059E-02 K-B(H)= 1.986E-01 K-H(B)= 1.184E+00 XAC/C-B(H)= 3.035E-01

AUTOMATED STABILITY AND CONTROL METHODS PER APRIL 1976 VERSION OF DATCOM
CONFIGURATION AUXILIARY AND PARTIAL OUTPUT
WING-BODY-VERTICAL TAIL-HORIZONTAL TAIL CONFIGURATION
CONFIGURATION BUILDUP, EXAMPLE PROBLEM 3, CASE 1

FLIGHT CONDITIONS					REFERENCE DIMENSIONS				
MACH NUMBER	ALTITUDE FT	VELOCITY FT/SEC	PRESSURE LB/FT**2	TEMPERATURE DEG R	REYNOLDS NUMBER 1/FT	REF. AREA FT**2	REFERENCE LENGTH LONG. FT	LAT. FT	MOMENT REF. HORIZ FT	CENTER VERT FT
.800					6.4000E+06	2.250	.822	3.000	2.600	0.000

*** WING DATA FAIRING ***

CDL/CL**2 = .1977E+00 CLB/CL = -.4598E-02
FORCE BREAK MACH NUMBER (ZERO SWEEP) = .9321E+00 FORCE BREAK MACH NUMBER (WITH SWEEP) = .9552E+00
MACH(A) = 1.025 CLA(A) = .5384E-01 MACH(B) = 1.095 CLA(B) = .4967E-01
(CLB/CL)M=0.6 = -.4771E-02 (CLB/CL)M=1.4 = -.2642E-02

LIFT-CURVE-SLOPE INTERPOLATION TABLE

MACH	CL-ALPHA
.750	.4868E-01
.955	.5710E-01
1.025	.5384E-01
1.095	.4967E-01
1.400	.4200E-01

*** WING-BODY DATA FAIRING ***

CLB/CL = -.7236E-02 (CLB/CL)MFB = -.4718E-02 (CLB/CL)M=1.4 = -.2033E-02 (CNA)M=1.4 = .5550E-01

*** HORIZONTAL TAIL DATA FAIRING ***

CDL/CL**2 = .2357E+00 CLB/CL = -.2345E-02
FORCE BREAK MACH NUMBER (ZERO SWEEP) = .9738E+00 FORCE BREAK MACH NUMBER (WITH SWEEP) = .9838E+00
MACH(A) = 1.054 CLA(A) = .1327E-01 MACH(B) = 1.124 CLA(B) = .1218E-01
(CLB/CL)M=0.6 = -.2620E-02 (CLB/CL)M=1.4 = -.2496E-03

LIFT-CURVE-SLOPE INTERPOLATION TABLE

MACH	CL-ALPHA
.750	.8234E-02
.984	.1401E-01
1.054	.1327E-01
1.124	.1218E-01
1.400	.7109E-02

*** HORIZONTAL TAIL-BODY DATA FAIRING ***

CLB/CL = -.1275E-02 (CLB/CL)MFB = -.9533E-03 (CLB/CL)M=1.4 = -.1559E-03 (CNA)M=1.4 = .1197E-01

*** BODY-WING-HORIZONTAL TAIL DATA FAIRING ***

DRAG DIVERGENCE MACH NUMBER = .931

MACH	CDO
.600	.1712E-01
.700	.1710E-01
1.100	.2432E-01
1.400	.2415E-01

FIGURE 26 EXAMPLE AUXILIARY AND PARTIAL OUTPUT

configuration equations. The effective downwash gradient, $d\epsilon/d\alpha$, is found by equating the right hand sides of Datcom equations 4.5.1.1-a and 4.5.1.1-b. The effective downwash angle, ϵ, is found by equating the right hand sides of Datcom equations 4.5.1.2-a and 4.5.1.2-b.

6.2 DIGITAL DATCOM SYSTEM OUTPUT

Execution of Digital Datcom will produce a series of messages and data in addition to the results previously discussed. This information falls into three categories: input diagnostics and error analysis, extrapolation warning messages, and Airfoil Section Module output. In addition to these outputs, an optional listing of the case input namelist data is available by using the NAMELIST control card (see Section 3.5).

Additional output may be obtained by using the DUMP and PART control cards. When the DUMP option is exercised, the contents of user specified data blocks are output prior to the conventional aerodynamic characteristics output. A list of the arrays and variables stored in each data block is presented in Appendix C.

6.2.1 Input Error Analysis

An input diagnostic module (CØNERR) checks all data in the input stream prior to execution of any other Digital Datcom module. This module checks all namelist and control cards and flags any errors. CØNERR headings and error messages are designed to be self explanatory. All input cards are listed and any cards containing errors have the appropriate message written immediately to the right of the card. An explanation of the seven messages that can be generated by CØNERR are given in Table 14. CØNERR will not correct any errors and the program will attempt to execute each case using the data as input by the user.

Prior to case execution, additional input error analysis is conducted to insure that all namelists essential to the case are present. This analysis will abort only those cases missing an essential namelist. The messages that can be produced by this analysis are given in Table 15.

6.2.2 Extrapolation Messages

Extrapolation messages are produced when the independent variable range of the Datcom figures (nomagraphs/design charts) have been exceeded. These mesages identify the number of the figure involved, the independent variable values currently being used, the resultant value of the dependent variable, the type of extrapolation that was used to generate the dependent variable,

TABLE 14 CONERR ERROR MESSAGES

ERROR MESSAGE	EXPLANATION
** ERROR ** UNKNOWN NAMELIST NAME	NAMELIST NAME NOT RECOGNIZED.
** MISSING NAMELIST TERMINATION ADDED	NAMELIST TERMINATION NOT FOUND.
** ERROR ** NO NAMELIST NAME FOLLOWING $	FIRST NAMELIST CARD DOES NOT CONTAIN A NAMELIST NAME.
** ERROR ** N*A N*B N*C N*D N*E N*F	ERROR FOUND ON THE CARD, N* DENOTES THE NUMBER OF OCCURRENCES OF EACH ERROR A - UNKNOWN VARIABLE NAME B - MISSING EQUAL SIGN FOLLOWING VARIABLE NAME C - NON-ARRAY VARIABLE HAS AN ARRAY DESIGNATION, (N) D - NON-ARRAY HAS MULTIPLE VALUES ASSIGNED E - ASSIGNED VALUES EXCEED ARRAY DIMENSION F - SYNTAX ERROR
** ILLEGAL CONTROL CARD	CONTROL CARD NOT RECOGNIZED.
** ERROR ** N INCORRECT ARRAY NAMES	ON A DUMP CARD, "N" ARRAY NAMES WERE INCORRECT
** ERROR ** INCORRECT LIFTING SURFACE DESIGNATION ON NACA CARD	COLUMN 6 OF THE NACA CARD DOES NOT CONTAIN W, H, V OR F.

TABLE 15 CASE ERROR MESSAGES

MESSAGE	EXPLANATION
ERROR ** FLAP INBOARD EDGE, SPANI=XXX, IS INSIDE THE BODY AS DEFINED BY SSPN AND SSPNE. SPANI IS REDEFINED, SPANI=SSPN-SSPNE=XXX.	THE FLAP INBOARD FLAP STATION, $b_i/2$, DEFINED IN NAMELIST SYMFLP OR ASYFLP LIES INSIDE THE BODY AS DEFINED BY THE TOTAL SPAN AND EXPOSED SPAN, b/2 AND b*/2, IN THE PLANFORM NAMELIST.
ERROR-FLIGHT CONDITIONS NOT PRESENT- MISSING NAME*FLTCØN*	NAMELIST "FLTCØN" NOT INPUT
ERROR-SYNTHESIS DATA MISSING-MISSING NAME *SYNTHS*	NAMELIST "SYNTHS" NOT INPUT
ERROR-WING PLANFORM PRESENT BUT SECTION CHARACTERISTICS ABSENT-MISSING NAME *WGSCHR*	NAMELIST "WGSCHR" OR "NACA-W" CONTROL CARD NOT INPUT
ERROR-WING SECTION CHARACTERISTICS PRESENT BUT PLANFORM ABSENT-MISSING NAME *WGPLNF*	NAMELIST "WGPLNF" NOT INPUT
ERROR-HORIZONTAL TAIL PLANFORM PRESENT BUT SECTION CHARACTERISTICS ABSENT-MISSING NAME *HTSCHR*	NAMELIST "HTSCHR" OR "NACA-H" CONTROL CARD NOT INPUT
ERROR-HORIZONTAL TAIL SECTION CHARACTERISTICS PRESENT BUT PLANFORM ABSENT-MISSING NAME *HTPLNF*	NAMELIST "HTPLNF" NOT INPUT
ERROR-VERTICAL TAIL PLANFORM PRESENT BUT SECTION CHARACTERISTICS ABSENT-MISSING NAME *VTSCHR*	NAMELIST "VTSCHR" OR "NACA-V" CONTROL CARD NOT INPUT
ERROR-VERTICAL TAIL SECTION CHARACTERISTICS PRESENT BUT PLANFORM ABSENT-MISSING NAME *VTPLNF*	NAMELIST "VTPLNF" NOT INPUT
ERROR-VENTRAL FIN PLANFORM PRESENT BUT SECTION CHARACTERISTICS ABSENT-MISSING NAME *VFSCHR*	NAMELIST "VFSCHR" OR "NACA-F" CONTROL CARD NOT INPUT
ERROR-VENTRAL FIN SECTION CHARACTERISTICS PRESENT BUT PLANFORM ABSENT-MISSING NAME *VFPLNF*	NAMELIST "VFPLNF" NOT INPUT
THIS CASE ABORTED FOR THE ABOVE REASON(S), ALL NAMES REFER TO NAMELIST NAMES	THIS CASE WILL NOT BE EXECUTED, THE NEXT CASE WILL BE ATTEMPTED.

and the name of the table look-up routine and the subroutine that contains the figure. They are printed primarily to alert users when the normal limit of *Datcom* figures has been exceeded so that the user can determine the credibility of the results. The messages are listed at the end of the case output. Extrapolation message interpretation is illustrated in Figure 27. The extrapolation mesages are written to a computer system "scratch tape" as they are generated. At the conclusion of the case they are read and sorted by figure number within each program overlay. In this way all extrapolations for a single figure produced in a method module are output together for convenience. Note that these extrapolation messages are not necessarily output in their order of occurance in the program.

6.2.3 Airfoil Section Module

The Airfoil Section Module is executed whenever airfoil section characteristics are to be calculated. Output consists of section coordinates and a listing of the calculated section characteristics.

The following example is a hypothetical extrapolation warning message created to illustrate the Digital Datcom technique.

```
                                                    EXTRAPOLATION MESSAGE SUMMARY

OVERLAY   FIGURE NUMBER                            TYPE OF EXTRAPOLATION (LOWER UPPER)
           SUBROUTINES                                 FIGURE LIMITS (LOWER UPPER)
                          FINAL RESULT                    INDEPENDENT VARIABLES

  23      5.1.2.1-27                     LAST VAL  QUADRTIC   LINEAR   QUADRTIC  LAST VAL  LAST VAL
          TLIN3X   SUPLAT                1.00E+00  8.00E+01 -2.00E+01  6.00E+01  0.        1.00E+00
                          -1.03813E-02     8.31203E+00 **      6.24200E+01 **      5.58603E-01
                                                 (X1)                (X2)                (X3)
```

Datcom figure 5.1.2.1-27 is used to aid the extrapolation message interpretation.

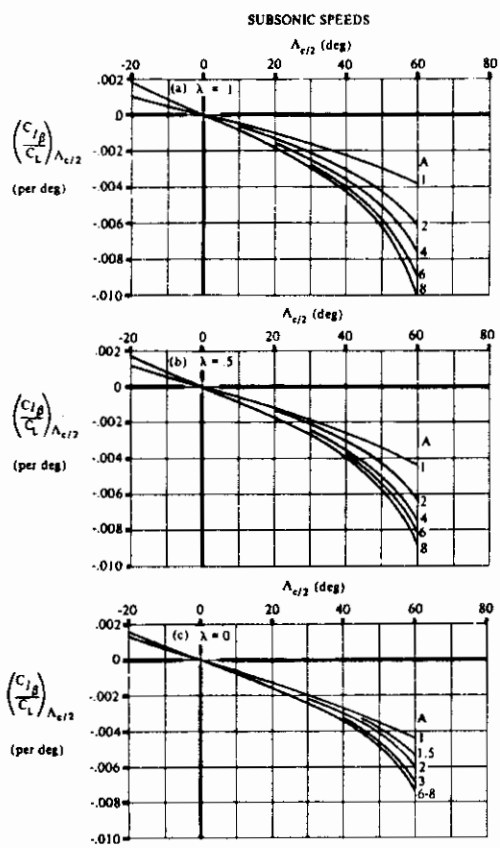

FIGURE 5.1.2.1-27 WING SWEEP CONTRIBUTION TO C_{l_β}

Step 1. Associate the Datcom figure variables with the Digital Datcom variables X1, X2, X3, by comparing lower and upper limit values with the limits shown on the Datcom figure. In this example:

X1 corresponds to A

X2 corresponds to $\Lambda_{c/2}$

X3 corresponds to λ

Step 2. From Step 1 determine the variable that relates the sub-figures (a), (b), and (c) (i.e. λ or X3). If this variable lies within the table limits, interpolation between two of the figures may be required. In this example X3 = .559. Thus interpolation is performed between figures (a) and (b).

Step 3. Extrapolate the variables according to the type of extrapolation given in the message. In this example figures (a) and (b) are extrapolated on variables X1(A) and X2($\Lambda_{c/2}$). Since the extrapolation technique is general, only figure (b) extrapolation will be demonstrated.

FIGURE 27 EXTRAPOLATION MESSAGE INTERPRETATION

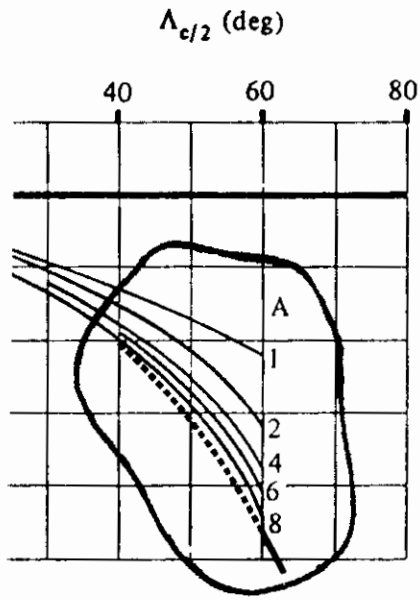

Cutout A shows a dashed curve added to figure (b) illustrating the quadratically extrapolated X1 variable to 8.31. Next, the dashed curve is extrapolated quadratically with a solid line to the X2 value of 62.4.

Step 4. Figure (a) is extrapolated as outlined above. The extrapolated values for figures (a) and (b) are then used to interpolate yielding the final result of -.0138.

CUTOUT A

This extrapolation information is written to logical unit 12 for processing by overlay 57. The format is as follows:

```
1  23  3  3
2  TLIN3X  SUPLAT  5.1.2.1-27
3    .83120E+01   .10000E+01   .80000E+01  0  2
4    .62420E+02   .20000E+02   .60000E+02  1  2
5    .55860E+00  0.            .10000E+01  0  0
6    .10381E-01
7  999999999
```

Line 1: Overlay number, number of four character words for figure number, and number independent variables.

Line 2: Subroutines and figure number

Lines 3-5: Extrapolation data for each independent variable:
Independent variable; lower limit; upper limit; type of extrapolation, lower and upper, where
-1 = not required
0 = use last value
1 = linear
2 = quadratic

Line 6: Final result

Line 7: End of extrapolation messages mark (written from overlay 57 prior to dump of extrapolation messages). Used to signify end of extrapolation messages for the case.

FIGURE 27 EXTRAPOLATION MESSAGE INTERPRETATION (CONCLUSION)

SECTION 7

EXAMPLE PROBLEMS

Eleven sample problems have been selected to illustrate the modeling techniques described in Section 4 as well as the use of the input namelist and control cards.

The paragraphs below describe each of the example problems selected for illustrating the program setup of the configurations described in Sections 4 and 5. The input data for each example problem is presented, and the complete output is presented in the microfiche supplement to this report.

7.1 EXAMPLE PROBLEM 1

Figure 28 shows three body configurations along with selected X coordinates where shape parameters would be specified. Notice the concentration of points used to define curvature and abrupt changes in body contours. Configuration (c) is chosen as the Problem 1 example to illustrate the body alone analysis at all speed regimes. Subsonic body analyses are obtained for an approximate axisymmetric body and for a cambered body.

A summary of the four cases in problem 1 is given below:

Case No.	Configuration	Mach No.	Comments
1	Body	0.60	Axisymmetric solution
2	Body	0.60	Cambered solution
3	Body	0.9,1.40,2.5	Supersonic analysis at Mach No. 1.4 and 2.5
4	Body	2.5	Hypersonic analysis

This problem illustrates the use of the CASEID, DUMP CASE, SAVE, and NEXT CASE control cards.

```
 $FLTCON NMACH=1.0,MACH(1)=0.60,NALPHA=11.,ALSCHD(1)=-6.0,-4.0,-2.0,0.0,2.0,
  4.0,8.0,12.0,16.0,20.0,24.0,RNNUB(1)=4.28E6$
 $OPTINS SREF=8.85,CBARR=2.46,BLREF=4.28$
 $SYNTHS XCG=4.14,ZCG=-0.20$
 $BODY NX=10.0,
  X(1)=0.0,0.258,0.589,1.26,2.26,2.59,2.93,3.59,4.57,6.26,
  S(1)=0.0,0.080,0.160,0.323,0.751,0.883,0.939,1.032,1.032,1.032,
  P(1)=0.0,1.00,1.42,2.01,3.08,3.34,3.44,3.61,3.61,3.61$
 $BODY BNOSE=1.,BLN=2.59,BLA=3.67$
CASEID APPROXIMATE AXISYMMETRIC BODY SOLUTION, EXAMPLE PROBLEM 1, CASE 1
SAVE
DUMP CASE
NEXT CASE
 $BODY ZU(1)=-.595,-.476,-.372,-.138,0.200,.334,.343,.343,.343,.343,
       ZL(1)=-.595,-.715,-.754,-.805,-.868,-.868,-.868,-.868,-.868,-.868$
CASEID ASYMMETRIC (CAMBERED) BODY SOLUTION, EXAMPLE PROBLEM 1, CASE 2
SAVE
NEXT CASE
 $FLTCON NMACH=3.0,MACH(1)=0.90,1.40,2.5,RNNUB(1)=6.4E6,9.96E6,17.8E6$
SAVE
CASEID ASYMMETRIC (CAMBERED) BODY SOLUTION, EXAMPLE PROBLEM 1, CASE 3
NEXT CASE
 $FLTCON NMACH=1.0,MACH(1)=2.5,RNNUB(1)=17.86E6,HYPERS=.TRUE.$
 $BODY DS=0.0$
CASEID HYPERSONIC BODY SOLUTION, EXAMPLE PROBLEM 1, CASE 4
NEXT CASE
```

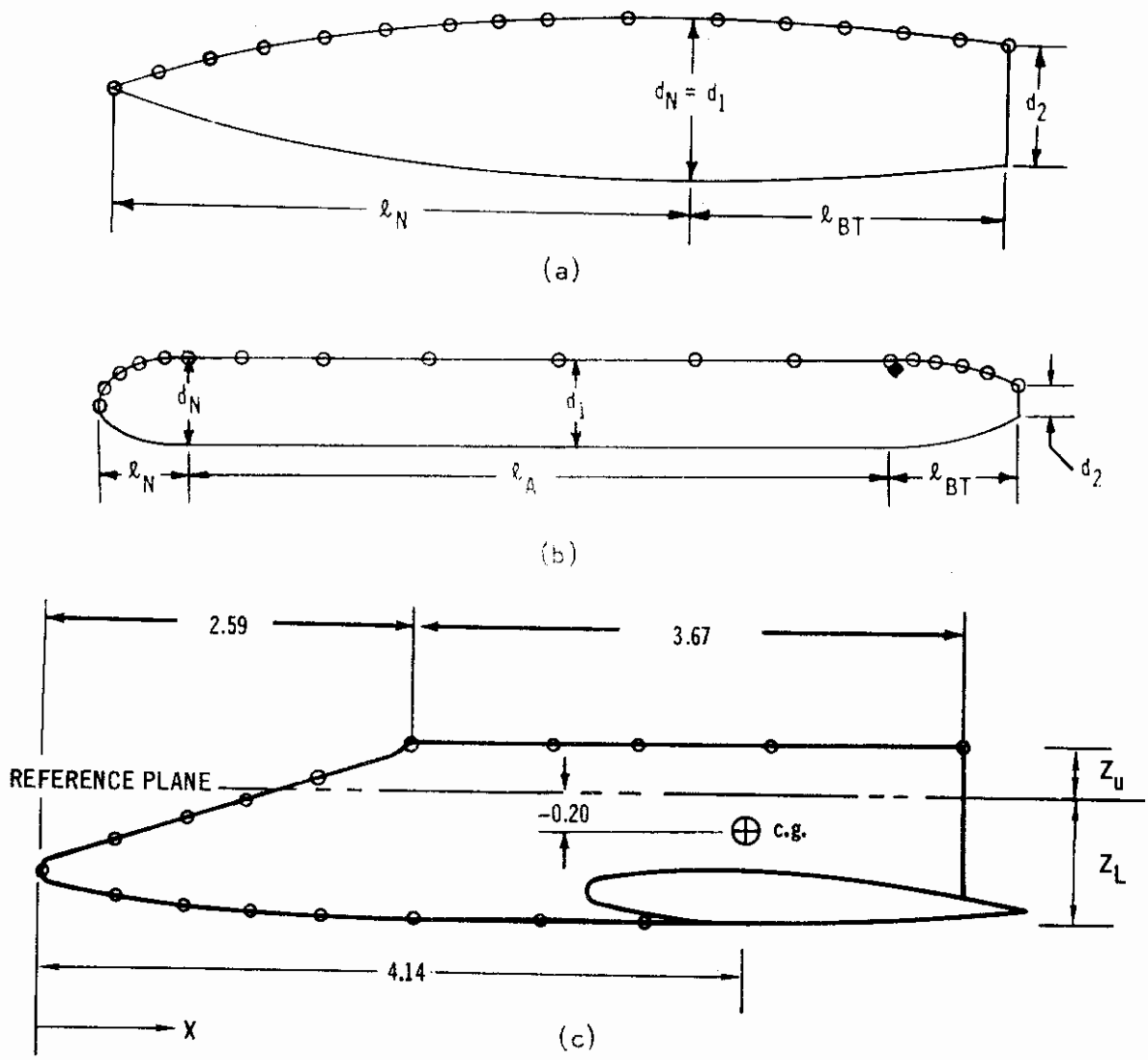

BODY INFORMATION (CONFIGURATION C)

X (FT)	S(FT^2)	P (FT)	R (FT)	Zu (FT)	Z_L (FT)
0.0	0.0	0.0	0.0	-0.595	-0.595
0.258	0.080	1.00	0.186	-0.476	-0.715
0.589	0.160	1.42	0.286	-0.372	-0.754
1.26	0.323	2.01	0.424	-0.138	-0.805
2.26	0.751	3.08	0.533	+0.200	-0.868
2.59	0.883	3.34	0.533	0.334	-0.868
2.93	0.939	3.44	0.533	0.343	-0.868
3.59	1.032	3.61	0.533	0.343	-0.868
4.57	1.032	3.61	0.533	0.343	-0.868
6.26	1.032	3.61	0.533	0.343	-0.868

FIGURE 28 BODY MODELING AND EXAMPLE PROBLEM 1 BODY DATA

7.2 EXAMPLE PROBLEM 2

Wing alone models for straight-tapered and nonstraight-tapered planforms are shown in Figure 29. The root and tip airfoil sections differ as shown in in Figure 30; therefore average values of section data are used where appropriate. Calculation and determination of section input characteristics are from the procedure and figures of Appendix B. These input variables are also summarized in Figure 30. The configuration analysis consists of:

Case No.	Configuration	Mach No.	Comments
1	Exposed wing	0.6,0.9,1.40	Straight-tapered-wing
		2.5	dump A array
2	Exposed wing	0.60	Cranked wing
3	Exposed wing	0.60	Double delta

This problem also illustrates the control of program looping using the variable LØØP in namelist FLTCØN to obtain the flight conditions. Note that cases 2 and 3 use the same inputs to FLTCØN, but LØØP is changed from 2 to 3.

```
 $FLTCON NMACH=4.0,MACH(1)=0.60,0.90,1.40,2.50,LOOP=1.,NALT=4.0,
  ALT(1)=0.,2000.,40000.,90000.,HYPERS=.FALSE.,
  NALPHA=11.,ALSCHD(1)=-6.0,-4.0,-2.0,0.0,2.0,4.0,8.0,12.0,16.0,20.0,24.0$
 $OPTINS SREF=8.85,CBARR=2.46,BLREF=4.28$
 $SYNTHS XW=3.61,ZW=-.80,ALIW=2.0,XCG=4.14$
 $WGPLNF CHRDTP=0.64,SSPNE=1.59,SSPN=1.59,CHRDR=2.90,SAVSI=55.0,CHSTAT=0.0,
  SWAFP=0.0,TWISTA=0.0,SSPNDD=0.0,DHDADI=0.0,DHDADO=0.0,TYPE=1.0$
 $WGSCHR DELTAY=2.85,XOVC=0.40,CLI=0.127,ALPHAI=0.123,CLALPA(1)=.1335,
  TOVC=0.11,
  CLMAX(1)=1.195,CMO=-.0262,LERI=.0134,CAMBER=.TRUE.,CLAMO=.105,TCEFF=0.055$
CASEID STRAIGHT TAPERED EXPOSED WING SOLUTION, EXAMPLE PROBLEM 2, CASE 1
SAVE
DUMP A
NEXT CASE
 $FLTCON NMACH=2.0,MACH(1)=0.60,2.5,LOOP=2.,NALT=2.,ALT(1)=0.,90000.$
 $SYNTHS XW=2.497,ZW=-.71$
 $WGPLNF SSPNOP=1.11,CHRDBP=2.24,CHRDR=4.01,SAVSI=75.1,SAVSO=55.0,TYPE=3.0$
 $WGSCHR TOVC=.10,LERI=0.011,LERO=.0158,TOVCO=0.12,XOVCO=0.40,CMOT=-.0262$
CASEID EXPOSED CRANKED WING SOLUTION, EXAMPLE PROBLEM 2, CASE 2
SAVE
NEXT CASE
 $FLTCON LOOP=3.$
 $WGPLNF TYPE=2.0$
CASEID EXPOSED DOUBLE DELTA WING SOLUTION, EXAMPLE PROBLEM 2, CASE 3
```

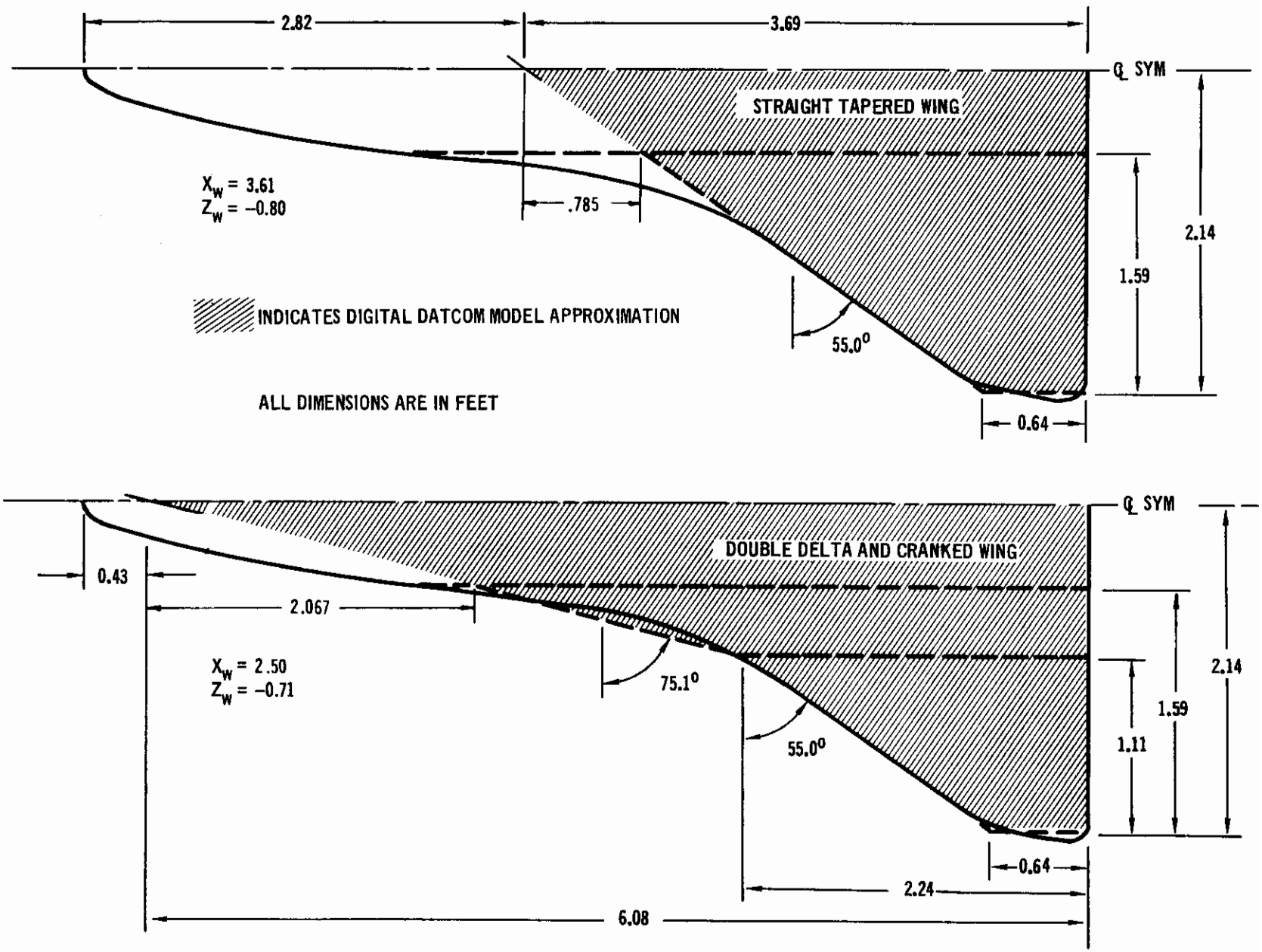

FIGURE 29 EXAMPLE PROBLEM 2 WING PLANFORM APPROXIMATIONS

REFER TO INPUT NAMELIST WGSCHR FIGURE 8

ROOT AIRFOIL = NACA 1410–64 TIP AIRFOIL = NACA 1412–64

ENGINEERING SYMBOL	VARIABLE NAME	VALUE OF VARIABLE		COMMENTS
		CRANKED OR DOUBLE DELTA	STRAIGHT TAPERED	
t/c	TØVC	0.10	0.11 ⚠	SEE APPENDIX B
$(t/c)_0$	TØVCØ	0.12	NA	
$(x/c)_{t\ MAX}$	XØVC	0.40	0.40 ⚠	
$(x/c)_{t\ MAX_0}$	XØVCØ	0.40	NA	
R_{LE}	LERI	0.011	0.0134 ⚠	
$(R_{LE})_0$	LERO	0.0158	NA	
ΔY	DELTAY	2.85	2.85	
c_{ℓ_α}	CLALPA	0.1335	.1335	
$c_{\ell_{MAX}}$	CLMAX	1.195	1.195	
c_{ℓ_i}	CLI	0.127	0.127	
α_i	ALPHAI	0.123	0.123	
c_{m_0}	CMO	–0.0262	–0 0262	
$(c_{m_0})_0$	CMOT	–0 0262	NA	
CAMBER	CAMBER	CAMBER = TRUE	CAMBER = TRUE	
$(c_{\ell_\alpha})_{M=0}$	CLAMO	0.105	0.105	
$(t/c)_{EFF}$	TCEFF	0.055	0.055	

⚠ STRAIGHT TAPERED VALUES EQUAL AVERAGE OF CRANKED OR DOUBLE DELTA VALUES

FIGURE 30 AIRFOIL CHARACTERISTIC VARIABLES, EXAMPLE PROBLEM 2

7.3 EXAMPLE PROBLEM 3

Pertinent data for Example Problem 3 are presented in Figure 31. The problem consists of a wing-body-horizontal tail-vertical-tail configuration analyzed at a subsonic and transonic Mach numbers. Results are obtained for various combinations of the vehicle components by using the BUILD option. The second case utilizes experimental body and wing-body data to update subsequent Digital Datcom configuration analyses. The remaining cases illustrate the use of the twin vertical panel, propeller power and jet power inputs. A summary of the various configurations analyzed is presented below.

Case No.	Configuration
1	Wing + body + vertical-tail + horizontal-tail configuration buildup
2	Wing + body + vertical-tail + horizontal-tail with body and wing-body experimental data
3	Wing + body + vertical-tail + horizontal-tail + twin-vertical-panels with body and wing body experimental data
4	Wing + body + vertical-tail + horizontal-tail + twin-vertical-panel + propeller power with body and wing-body experimental data
5	Wing + body + vertical-tail + horizontal-tail + twin-vertical-tail + jet power with body and wing-body experimental data

```
BUILD
 $FLTCON NMACH=2.0,MACH(1)=.60,.80,NALPHA=9.0,ALSCHD(1)=-2.0,0.0,2.0,
  4.0,8.0,12.0,16.0,20.0,24.0,RNNUB(1)=2.28E6,3.04E6$
 $FLTCON NMACH=3.0,MACH(1)=0.60,0.80,1.5,RNNUB(1)=4.26E6,6.4E6,
  9.96E6,$
 $OPTINS SREF=2.25,CBARR=0.822,BLREF=3.00$
 $SYNTHS XCG=2.60,ZCG=0.0,XW=1.70,ZW=0.0,ALIW=0.0,XH=3.93,
  ZH=0.0,ALIH=0.0,XV=3.34,VERTUP=.TRUE.$
 $BODY NX=10.0,BNOSE=2.0,BTAIL=1.0,BLN=1.46,BLA=1.97,
  X(1)=0.0,.175,.322,.530,.850,1.460,2.50,3.43,3.97,4.57,
  S(1)=0.0,.00547,.0220,.0491,.0872,.136,.136,.136,.0993,.0598,
  P(1)=0.0,.262,.523,.785,1.04,1.305,1.305,1.305,1.12,.866,
  R(1)=0.0,.0417,.0833,.125,.1665,.208,.208,.208,.178,.138$
 $WGPLNF CHRDTP=0.346,SSPNE=1.29,SSPN=1.50,CHRDR=1.16,SAVSI=45.0,CHSTAT=0.25,
  SWAFP=0.0,TWISTA=0.0,SSPNDD=0.0,DHDADI=0.0,DHDADO=0.0,TYPE=1.0$
 $WGSCHR TOVC=.060,DELTAY=1.30,XOVC=0.40,CLI=0.0,ALPHAI=0.0,CLALPA(1)=0.131,
  CLMAX(1)=.82,CMO=0.0,LERI=.0025,CLAMO=.105$
 $VTPLNF CHRDTP=.420,SSPNE=.63,SSPN=.849,CHRDR=1.02,SAVSI=28.1,
  CHSTAT=.25,SWAFP=0.0,TWISTA=0.0,TYPE=1.0$
 $VTSCHR TOVC=.09,XOVC=0.40,CLALPA(1)=0.141,LERI=.0075$
 $WGSCHR CLMAXL=0.78$
 $HTPLNF CHRDTP=.253,SSPNE=.52,SSPN=.67,CHRDR=.42,SAVSI=45.0,CHSTAT=0.25,
  SWAFP=0.0,TWISTA=0.0,SSPNDD=0.0,DHDADI=0.0,DHDADO=0.0,TYPE=1.0$
 $HTSCHR TOVC=0.060,DELTAY=1.30,XOVC=0.40,CLI=0.0,ALPHAI=0.0,CLALPA(1)=.131,
  CLMAX(1)=0.82,CMO=0.0,LERI=.0025,CLAMO=.105$
CASEID CONFIGURATION BUILDUP, EXAMPLE PROBLEM 3, CASE 1
SAVE
NEXT CASE
 $EXPR01 CLAWB(1)=.0575,CMAWB(1)=-.0050,
  CDWB(1)=.015,.014,.015,.019,.064,.141,.216,.302,.410,
  CLWB(1)=-.115,0.0,.115,.23,.47,.65,.76,.81,.90,
  CMWB(1)=.010,0.0,-.010,-.020,-.038,-.002,-.013,-.013,-.020,
  CLAB(1)=.002,CMAB(1)=.0039,
  CDB(1)=.012,.010,.012,.013,.014,.016,.020,.030,.047,
  CLB(1)=-.004,0.0,.004,.008,.012,.020,.060,.085,.10,
  CMB(1)=-.0078,.0078,.020,.038,.060,.083,.110,.140,.165,$
 $EXPR02 CLAWB(1)=.06,CLAB(1)=.002,CMAB(1)=.0039,
  ALPOW=0.0,ALPLW=8.8,ACLMW=12.01,CLMW=1.39,
  ALPOH=0.0,ALPLH=6.2,ACLMH=10.10,CLMH=1.02,$
CASEID INCLUDES BODY AND WING-BODY EXPERIMENTAL DATA, EXAMPLE PROBLEM 3, CASE 2
SAVE
NEXT CASE
 $TVTPAN BVP=0.40,BV=.60,BDV=.36,BH=1.10,SV=.360,VPHITE=20.0,VLP=1.04,ZP=0.0$
CASEID INCLUDES BODY AND WING-BODY EXPERIMENTAL DATA, EXAMPLE PROBLEM 3, CASE 3
SAVE
NEXT CASE
 $FLTCON NMACH=1.0,MACH(1)=.6,RNNUB(1)=2.28E6$
 $PROPWR AIETLP=2.0,NENGSP=1.0,THSTCP=0.15,PHALOC=0.0,PHVLOC=0.0,PRPRAD=0.40,
  ENGFCT=70.0,NOPBPE=4.0,BAPR75=18.0,YP=0.0,CROT=.FALSE.$
CASEID INCLUDES BODY AND WING-BODY EXPERIMENTAL DATA, EXAMPLE PROBLEM 3, CASE 4
SAVE
NEXT CASE
 $FLTCON NMACH=1.0,MACH(1)=.6,RNNUB(1)=2.28E6$
 $JETPWR AIETLJ=2.0,NENGSJ=1.0,THSTCJ=.35,JIALOC=0.0,JEVLOC=0.0,JEALOC=0.5,
  JINLTA=3.0,JEANGL=15.0,JEVELO=4000.,AMBTMP=500.,JESTMP=2000.,JELLOC=0.0,
  JETOTP=5000.,AMBSTP=500.,JERAD=2.0$
CASEID INCLUDES BODY AND WING-BODY EXPERIMENTAL DATA, EXAMPLE PROBLEM 3, CASE 5
NEXT CASE
```

FLIGHT CONDITIONS: MACH NUMBERS = 0.60, 0.80
REYNOLDS NUMBERS PER FT = 2.28×10^6, 3.04×10^6
SCHEDULED ANGLES OF ATTACK = −2.0, 0.0, 2.0, 4.0, 8.0, 12.0, 16.0, 20.0, 24.0

REFERENCE PARAMETERS: REFERENCE AREA = 2.25
LONG. REF. LENGTH = 0.822
LATERAL REF. LENGTH = 3.00

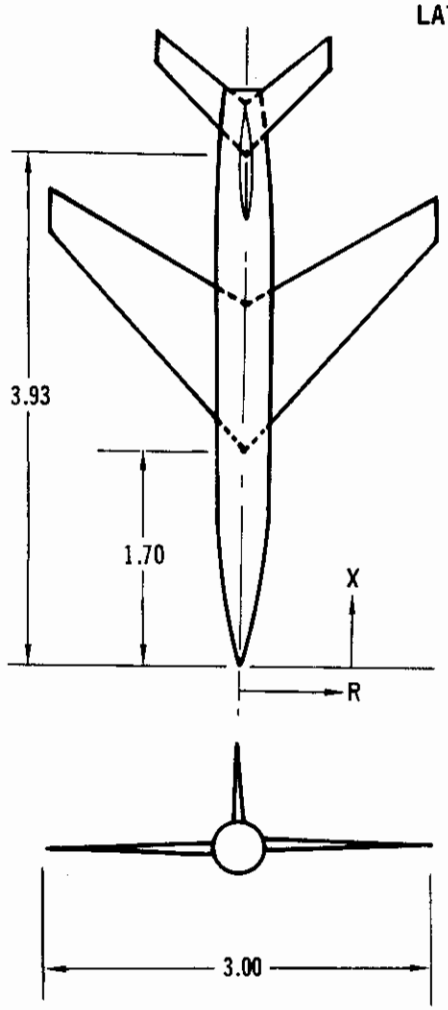

	WING	HORIZONTAL TAIL	VERTICAL TAIL
SEMISPAN	1.50	0.67	0.849
EXPOSED SEMISPAN	1.29	0.52	0.630
c_t	0.346	0.253	0.42
c_R	1.16	0.420	1.02
$\Lambda_{c/4}$	45^0	45^0	28.1
AIRFOIL	NACA 65A006	NACA 65A006	NACA 63A009

REFER TO INPUT DATA FOR BODY AND PROPELLER POWER DATA.

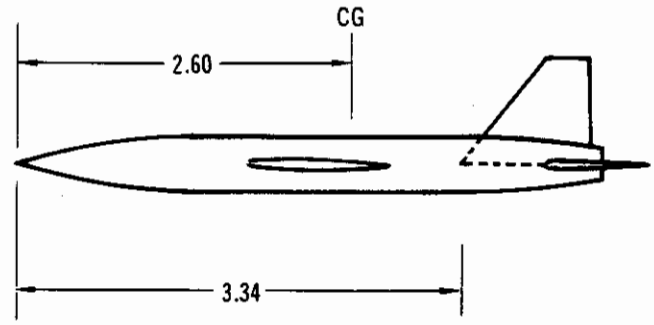

EXPERIMENTAL DATA

MACH = 0.60 $(C_{L_\alpha})_B = 0.002$, $(C_{m_\alpha})_B = 0.0039$,
$(C_{L_\alpha})_{WB} = 0.0575$, $(C_{m_\alpha})_{WB} = -0.005$

MACH = 0.80 $(C_{L_\alpha})_B = 0.002$, $(C_{m_\alpha})_B = 0.0039$,
$(C_{L_\alpha})_{WB} = 0.060$

ALPHA	$(C_D)_B$	$(C_L)_B$	$(C_m)_B$	$(C_D)_{WB}$	$(C_L)_{WB}$	$(C_m)_{WB}$	$(C_D)_B$
−2	0.012	−0.004	−0.0078	0.015	−0.115	0.010	0.012
0	0.010	0.0	0.0078	0.014	0.0	0.0	0.010
2	0.012	0.004	0.020	0.015	0.115	−0.010	0.012
4	0.013	0.008	0.038	0.019	0.23	−0.020	0.013
8	0.014	0.012	0.060	0.064	0.47	−0.038	0.014
12	0.016	0.020	0.083	0.141	0.65	−0.002	0.016
16	0.020	0.060	0.110	0.216	0.76	+0.013	0.020
20	0.030	0.085	0.140	0.302	0.81	−0.013	0.032
24	0.047	0.100	0.165	0.410	0.90	−0.020	0.050

FIGURE 31 EXAMPLE PROBLEM 3 DATA

7.4 EXAMPLE PROBLEM 4

Pertinent information for Example Problem 4 is presented in Figure 32. In this example a wing-body-canard configuration is analyzed in the subsonic speed regime (Case 1). Canard and wing section data are calculated using the Airfoil Section Module (Appendix B). Case 2 illustrates the use of the supersonic airfoil option of the Airfoil Section Module, nonzero body nose ordinate, vehicle scale factor, and use of metric inputs. Note that since the NACA control cards are being used, RNNUB and MACH must be used to define the flight conditions.

```
 $FLTCON NMACH=1.0,MACH(1)=0.60,NALPHA=5.,ALSCHD(1)=0.0,5.0,10.0,15.0,20.0,
  RNNUB(1)=3.1E6$
 $OPTINS SREF=694.2,CBARR=18.07,BLREF=45.6$
 $SYNTHS XCG=36.68,ZCG=0.0$
 $BODY NX=19.0,BNOSE=2.0,BTAIL=2.0,BLN=30.0,BLA=0.0,
  X(1)=0.0,2.01,5.49,8.975,12.47,15.97,19.47,22.89,26.49,30.0,33.51,37.02,
   40.53,44.03,47.53,51.02,54.52,57.99,60.0,
  S(1)=0.0,2.89,7.42,11.32,14.64,17.36,19.49,21.0,21.91,22.20,21.90,
   21.0,19.49,17.36,14.64,12.33,7.42,2.89,0.0,
  P(1)=0.0,1.84,4.72,7.21,9.32,11.05,12.41,13.36,13.94,14.14,13.94,
   13.36,12.41,11.05,9.32,7.21,4.72,1.84,0.0,
  R(1)=0.0,.293,.752,1.15,1.48,1.76,1.97,2.13,2.22,2.25,2.22,2.13,1.97,1.76,
   1.48,1.15,.752,.293,0.0,$
NACA-W-6-65A004
NACA-H-6-65A004
 $WGPLNF CHSTAT=0.0,
  SWAFP=0.0,TWISTA=0.0,SSPNDD=0.0,DHDADI=0.0,DHDADO=0.0,TYPE=1.0$
 $SYNTHS XW=8.064,ZW=0.0,ALIW=0.0$
 $WGPLNF CHRDTP=0.0,SSPNE=6.205,SSPN=8.01,CHRDR=13.87,SAVSI=60.0$
 $SYNTHS XH=29.42,ZH=0.0,ALIH=0.0$
 $HTPLNF SSPNE=21.34,SSPN=22.82,CHRDR=26.62,SAVSI=38.52,CHSTAT=0.0,
  CHRDTP=3.80,
  SWAFP=0.0,TWISTA=0.0,SSPNDD=0.0,DHDADI=0.0,DHDADO=0.0,TYPE=1.0,SHB(1)=73.5,
  SEXT(1)=73.5,RLPH(1)=47.3$
CASEID BODY PLUS WING PLUS CANARD, EXAMPLE PROBLEM 4, CASE 1
NEXT CASE
DIM M
 $FLTCON NMACH=1.0,MACH(1)=2.00,NALPHA=5.,ALSCHD(1)=0.0,5.0,10.0,15.0,20.0,
  RNNUB(1)=6.56E6,NALT=1.,ALT(1)=27400.$
 $OPTINS SREF=64.4933,CBARR=5.5077,BLREF=13.9111$
 $SYNTHS XCG=12.1800,ZCG=0.0,SCALE=0.30$
 $BODY NX=19.0,BNOSE=2.0,BTAIL=2.0,BLN=9.144,BLA=0.0,
  X(1)=1.0,1.613,2.673,3.736,4.801,5.868,6.934,8.004,9.074,10.144,11.214,
  12.284,13.354,14.420,15.487,16.551,17.618,18.675,19.288,
  S(1)=0.,.268,.689,1.052,1.360,1.613,1.811,1.951,2.036,2.062,2.085,
  1.951,1.811,1.613,1.360,1.053,.689,.268,0.,
  P(1)=0.,.561,1.439,2.198,2.841,3.368,3.783,4.072,4.249,4.310,4.249,
  4.072,3.783,3.368,2.841,2.198,1.439,.561,0.,
  R(1)=0.,.089,.229,.351,.451,.536,.600,.649,.677,.686,.677,.649,.600,
  .536,.451,.351,.229,.089,0.$
NACA-W-S-3-30.0-2.5-20.0
NACA-H-S-1-50.0-2.5
 $WGPLNF CHSTAT=0.0,
  SWAFP=0.0,TWISTA=0.0,SSPNDD=0.0,DHDADI=0.0,DHDADO=0.0,TYPE=1.0$
 $SYNTHS XW=3.4579,ZW=0.0,ALIW=0.0$
 $WGPLNF CHRDTP=0.0,SSPNE=1.8913,SSPN=2.4414,CHRDR=4.2276,SAVSI=60.0$
 $SYNTHS XH=9.9672,ZH=0.0,ALIH=0.0$
 $HTPLNF SSPNE=6.5044,SSPN=6.9555,CHRDR=8.1138,SAVSI=38.52,CHSTAT=0.0,
  CHRDTP=1.1582,
  SWAFP=0.0,TWISTA=0.0,SSPNDD=0.0,DHDADI=0.0,DHDADO=0.0,TYPE=1.0,SHB(1)=6.8283,
  SEXT(1)=6.8284,RLPH(1)=14.4170$
CASEID BODY PLUS WING PLUS CANARD, EXAMPLE PROBLEM 4, CASE 2
NEXT CASE
```

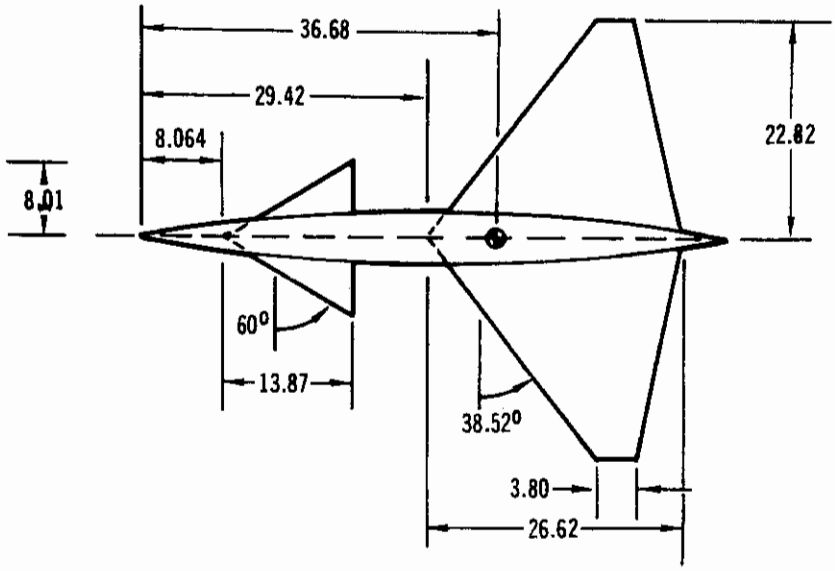

REFERENCE DATA

REFERENCE AREA = 694.2
LONGITUDINAL REF. LENGTH = 18.07
LATERAL REF. LENGTH = 45.64

FLIGHT CONDITION DATA

MACH NUMBER = 0.60
REYNOLDS NO./FT = 3.1×10^6
SCHEDULED ANGLES OF ATTACK = 0.0, 5.0, 10.0, 15.0, 20.0

BODY DATA

X	S	P	R
0.0	0.0	0.0	0.0
2.01	2.89	1.84	0.293
5.49	7.42	4.72	0.752
8.975	11.32	7.21	1.15
12.47	14.64	9.32	1.48
15.97	17.36	11.05	1.76
19.47	19.49	12.41	1.97
22.98	21.0	13.36	2.13
26.49	21.91	13.94	2.22
30.0	22.20	14.14	2.25
33.51	21.90	13.94	2.22
37.02	21.0	13.36	2.13
40.53	19.49	12.41	1.97
44.03	17.36	11.05	1.76
47.53	14.64	9.32	1.48
51.02	11.33	7.21	1.15
54.52	7.42	4.72	0.752
57.99	2.89	1.84	0.293
60.0	0.0	0.0	0.0

WING AND CANARD DATA

AIRFOIL NACA 65A004

FIGURE 32 EXAMPLE PROBLEM 4 DATA

7.5 EXAMPLE PROBLEM 5

The wing-body portion of the configuration used in Example Problem 3 is modified by attaching plain trailing-edge flaps to the wing. This example problem is used to illustrate partial outputs and dynamic derivative input and output. A summary of Example Problem 5 analysis is as follows:

Case No.	Configuration	Mach No.	Comments
1	Body + wing	0.60	PART, DAMP, DUMP DYN
2	Body + wing + plain trailing-edge flaps	0.60	DUMP FCM

The Digital Datcom output data, including a dump of the DYN and FCM common arrays, are presented in the microfiche supplement. The flap configuration is shown in Figure 33.

```
DIM FT
PART
 $FLTCON NALPHA=9.0,ALSCHD(1)=-2.0,0.0,2.0,4.0,8.0,
  12.0,16.0,20.0,24.0$
 $FLTCON NMACH=1.0,MACH(1)=0.60,RNNUB(1)=4.26E6$
 $OPTINS SREF=2.25,CBARR=0.822,BLREF=3.00$
 $SYNTHS XCG=2.60,ZCG=0.0,XW=1.70,ZW=0.0,ALIW=0.0$
 $BODY NX=10.0,BNOSE=2.0,BTAIL=1.0,BLN=1.46,BLA=1.97,
  X(1)=0.0,.175,.322,.530,.85,1.46,2.50,3.43,3.97,4.57,
  R(1)=0.0,.0417,.0833,.125,.1665,.208,.208,.208,.178,.138$
 $WGPLNF CHRDTP=0.346,SSPNE=1.29,SSPN=1.50,CHRDR=1.16,SAVSI=45.0,CHSTAT=.25,
  SWAFP=0.0,TWISTA=0.0,SSPNDD=0.0,DHDADI=0.0,DHDADO=0.0,TYPE=1.0$
 $WGSCHR TOVC=.060,DELTAY=1.30,XOVC=0.40,CLI=0.0,ALPHAI=0.0,CLALPA(1)=0.131,
  CLMAX(1)=.82,CM0=0.0,LERI=0.0025,CLAMO=.105$
 $WGSCHR CLMAXL=.8,TCEFF=.03$
CASEID BODY-WING DAMPING DERIVATIVES, EXAMPLE PROBLEM 5, CASE 1
DAMP
SAVE
DUMP DYN
NEXT CASE
 $SYMFLP NDELTA=6.0,DELTA(1)=0.,10.,20.,30.,40.,60.,PHETE=.0522,CHRDFI=.2094,
  CHRDFO=.1554,SPANFI=.208,SPANFO=.708,FTYPE=1.0,CB=.01125,TC=.0225,
  PHETEP=.0391,NTYPE=1.$
CASEID PLAIN FLAPS ON WING, EXAMPLE PROBLEM 5, CASE 2
DUMP FCM
NEXT CASE
```

FLIGHT CONDITIONS: MACH NUMBER = 0.60
REYNOLDS NUMBERS PER FT = 4.26×10^6
SCHEDULED ANGLES OF ATTACK = −2.0, 0.0, 2.0, 4.0, 8.0, 12.0, 16.0, 20.0, 24.0

REFERENCE PARAMETERS: REFERENCE AREA = 2.25
LONG. REF. LENGTH = 0.822
LATERAL REF. LENGTH = 3.00

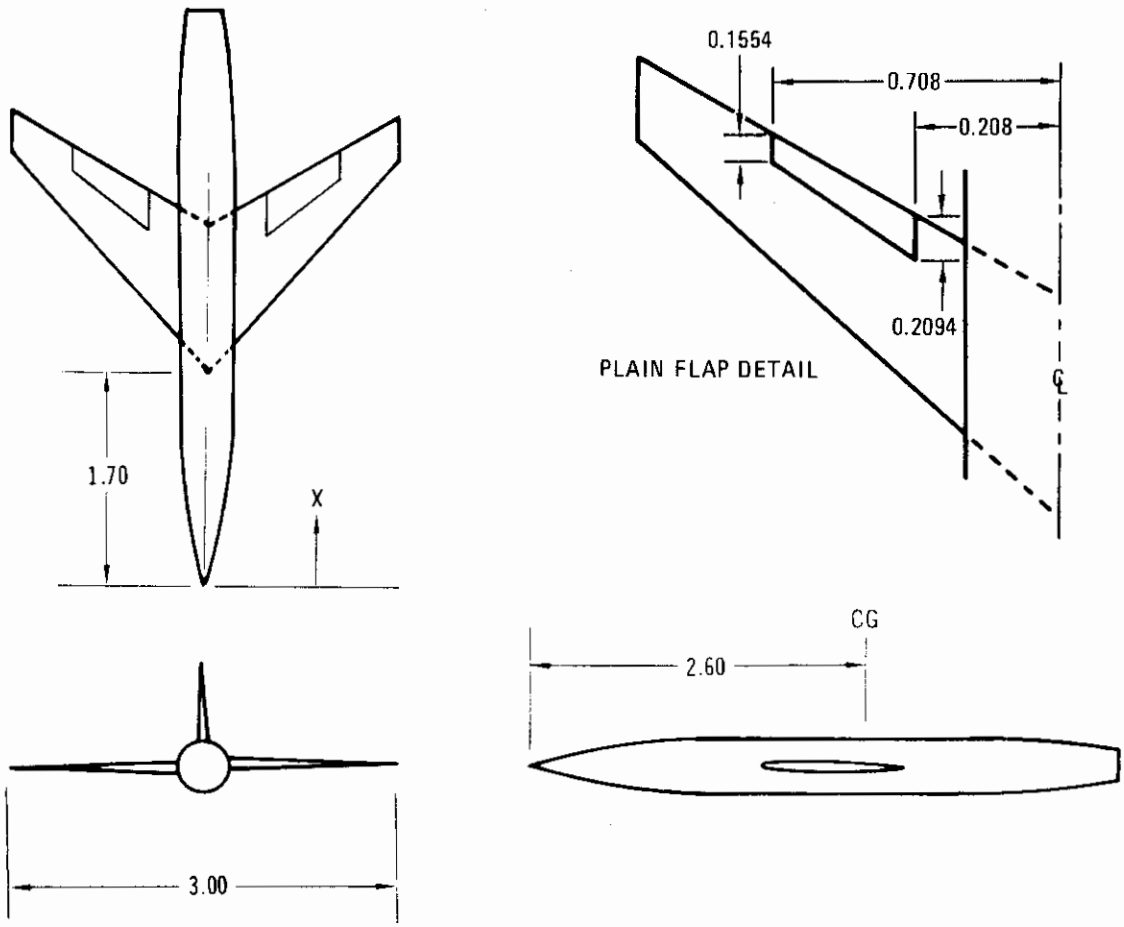

FIGURE 33 EXAMPLE PROBLEM 5 DATA

7.6 EXAMPLE PROBLEM 6

The wing-body configuration of Example Problem 3 is used to illustrate aileron and spoiler input and output data. Figure 34 shows the geometry.

```
 $FLTCON NALPHA=9.0,ALSCHD=-2.0,0.0,2.0,4.0,8.0,
  12.0,16.0,20.0,24.0$
 $FLTCON NMACH=1.0,MACH(1)=0.60,RNNUB(1)=4.26E6,$
 $OPTINS SREF=2.25,CBARR=0.822,BLREF=3.00$
 $SYNTHS XCG=2.60,ZCG=0.0,XW=1.70,ZW=0.0,ALIW=0.0$
 $BODY NX=10.0,BNOSE=2.0,BTAIL=1.0,BLN=1.46,BLA=1.97,
  X(1)=0.0,.175,.322,.530,.85,1.46,2.50,3.43,3.97,4.57,
  R(1)=0.0,.0417,.0833,.125,.1665,.208,.208,.208,.178,.138$
 $WGPLNF CHRDTP=0.346,SSPNE=1.29,SSPN=1.50,CHRDR=1.16,SAVSI=45.0,CHSTAT=.25,
  SWAFP=0.0,TWISTA=0.0,SSPNDD=0.0,DHDADI=0.0,DHDADO=0.0,TYPE=1.0$
 $WGSCHR TOVC=.060,DELTAY=1.30,XOVC=0.40,CLI=0.0,ALPHAI=0.0,CLALPA(1)=0.131,
  CLMAX(1)=.82,CM0=0.0,LERI=0.0025,CLAMO=.105$
 $ASYFLP DELTAL(1)=5.,10.,20.,30.,40.,DELTAR(1)=-2.,-5.,-10.,-15.,-20.,
  STYPE=4.0,
  NDELTA=5.,CHRDFI=.1116,CHRDFO=.0692,SPANFI=1.108,SPANFO=1.50,PHETE=.0522$
CASEID PLAIN FLAP AILERON, EXAMPLE PROBLEM 6, CASE 1
SAVE
NEXT CASE
 $ASYFLP STYPE=3.0,DELTAD(1)=.0130,.0261,.0380,.0513,.0630,.0750,
  DELTAS(1)=.013,.0261,.038,.0513,.063,.075,
  XSOC(1)=.6980,
  .6955,.6880,.6638,.6456,.6250,XSPRME=.55,HSOC(1)=.0357,.0710,.0956,.1182,
  .1365,.1359$
CASEID SPOILER-SLOT-DEFLECTOR ON WING, EXAMPLE PROBLEM 6, CASE 2
NEXT CASE
```

FLIGHT CONDITIONS: MACH NUMBER = 0.60
REYNOLDS NUMBERS PER FT = 4.26×10^6
SCHEDULED ANGLES OF ATTACK = −2.0, 0.0, 2.0, 4.0, 8.0, 12.0, 16.0, 20.0, 24.0

REFERENCE PARAMETERS: REFERENCE AREA = 2.25
LONG. REF. LENGTH = 0.822
LATERAL REF. LENGTH = 3.00

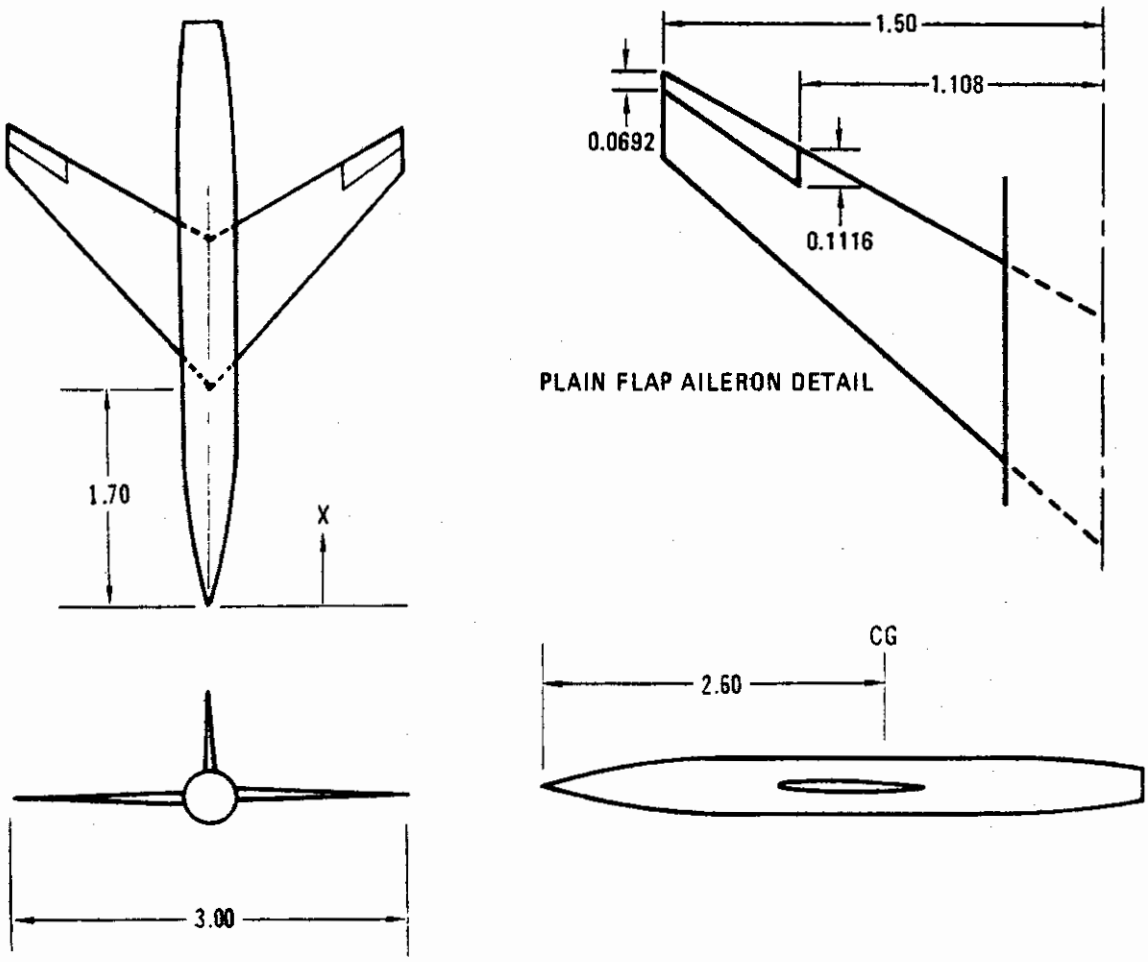

FIGURE 34 EXAMPLE PROBLEM 6 DATA

7.7 EXAMPLE PROBLEM 7

The wing-body-tail configuration of Example Problem 3 is used to illustrate trim control with an elevator on the horizontal tail. In addition, the effect of plain trailing-edge flaps on the wing (see Example Problem 5) is included via experimental data input to illustrate a procedure for multiple high-lift and control device analysis. The wing high lift increment output is used to update wing-body undeflected totals via namelist EXPRnn.

The geometry is sketched in Figure 35.

```
$FLTCON NMACH=1.0,MACH(1)=.60,NALPHA=9.0,ALSCHD(1)=-2.0,0.0,2.0,4.0,8.0,
 12.0,16.0,20.0,24.0,RNNUB(1)=2.28E6$
$OPTINS SREF=2.25,CBARR=0.822,BLREF=3.0$
$SYNTHS XCG=2.60,ZCG=0.0,XW=1.70,ZW=0.0,ALIW=0.0,XH=3.93,ZH=0.0,ALIH=0.0,
 XV=3.34,VERTUP=.TRUE.$
$BODY NX=10.,
 X(1)=0.0,.175,.322,.530,.85,1.46,2.50,3.43,3.97,4.57,
 R(1)=0.0,.0417,.0833,.125,.1665,.208,.208,.208,.178,.138$
$WGPLNF CHRDTP=0.346,SSPNE=1.29,SSPN=1.50,CHRDR=1.16,SAVSI=45.0,CHSTAT=.25,
 SWAFP=0.0,TWISTA=0.0,SSPNDD=0.0,DHDADI=0.0,DHDADO=0.0,TYPE=1.0$
$WGSCHR TOVC=.060,DELTAY=1.30,XOVC=0.40,CLI=0.0,ALPHAI=0.0,CLALPA(1)=0.131,
 CLMAX(1)=.82,CM0=0.0,LERI=0.0025,CLAMO=.105$
$WGSCHR CLMAXL=0.78$
$VTPLNF CHRDTP=.420,SSPNE=.63,SSPN=.849,CHRDR=1.02,SAVSI=28.1,
 CHSTAT=.25,SWAFP=0.0,TWISTA=0.0,TYPE=1.0$
$VTSCHR TOVC=.09,XOVC=0.40,CLALPA(1)=0.141,LERI=.0075$
$HTPLNF CHRDTP=.253,SSPNE=.52,SSPN=.67,CHRDR=.42,SAVSI=45.0,CHSTAT=0.25,
 SWAFP=0.0,TWISTA=0.0,SSPNDD=0.0,DHDADI=0.0,DHDADO=0.0,TYPE=1.0$
$HTSCHR TOVC=0.060,DELTAY=1.30,XOVC=0.40,CLI=0.0,ALPHAI=0.0,CLALPA(1)=.131,
 CLMAX(1)=0.82,CMO=0.0,LERI=.0025,CLAMO=.105$
$SYMFLP FTYPE=1.0,NDELTA=9.,DELTA(1)=-60.,-40.,-20.,-10.,0.,10.,
 20.,40.,60.,PHETE=.0522,PHETEP=.0523,SPANFI=.18,SPANFO=.670,CHRDFI=.075,
 CHRDFO=.051,CB=.0038,TC=.0076,NTYPE=1.0,$
$EXPR01 CLWB(1)=.09,.204,.330,.450,.690,.895,1.070,1.180,1.174$
TRIM
CASEID INCLUDES HIGH LIFT EFFECT ON WING, EXAMPLE PROBLEM 7
NEXT CASE
```

FLIGHT CONDITIONS: MACH NUMBER = 0.60
REYNOLDS NUMBERS PER FT = 2.28×10^6
SCHEDULED ANGLES OF ATTACK = −2.0, 0.0, 2.0, 4.0, 8.0, 12.0, 16.0, 20.0, 24.0

REFERENCE PARAMETERS: REFERENCE AREA = 2.25
LONG. REF. LENGTH = 0.822
LATERAL REF. LENGTH = 3.00

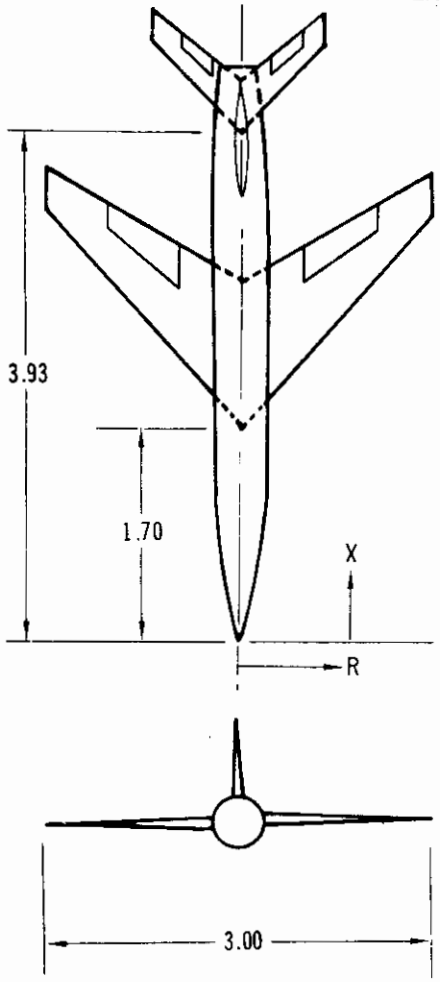

	WING	HORIZONTAL TAIL	VERTICAL TAIL
SEMISPAN	1.50	0.67	0.849
EXPOSED SEMISPAN	1.29	0.52	0.630
c_t	0.346	0.253	0.42
c_R	1.16	0.420	1.02
$\Lambda_{c/4}$	45^0	45^0	28.1
AIRFOIL	NACA 65A006	NACA 65A006	NACA 63A009

PLAIN FLAP EFFECT ADDED AS EXPERIMENTAL DATA SUBSTITUTION

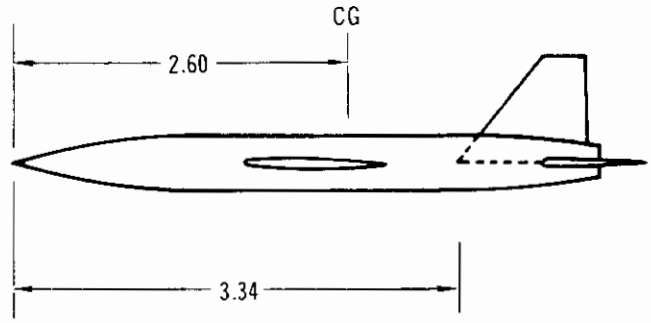

FIGURE 35 EXAMPLE PROBLEM 7 DATA

7.8 EXAMPLE PROBLEM 8

The all-movable horizontal tail trim case is illustrated using the configuration of Example Problem 3. Note that a hinge-axis distance is specified in namelist SYNTHS and a TRIM control card is present in the case.

```
 $FLTCON NMACH=1.0,MACH(1)=0.60,NALPHA=9.0,ALSCHD(1)=-2.0,0.0,2.0,4.0,8.0,
  12.0,16.0,20.0,24.0,RNNUB(1)=2.28E6$
 $OPTINS SREF=2.25,CBARR=0.822,BLREF=3.00$
 $SYNTHS XCG=2.60,ZCG=0.0,XW=1.70,ZW=0.0,ALIW=0.0,XH=3.93,ZH=0.0,ALIH=0.0,
  XV=3.34,VERTUP=.TRUE.$
 $SYNTHS HINAX=4.271$
 $BODY NX=10.0,
  X(1)=0.0,.175,.322,.530,.85,1.46,2.50,3.43,3.97,4.57,
  R(1)=0.0,.0417,.0833,.125,.1665,.208,.208,.208,.178,.138$
 $WGPLNF CHRDTP=0.346,SSPNE=1.29,SSPN=1.50,CHRDR=1.16,SAVSI=45.0,CHSTAT=.25,
  SWAFP=0.0,TWISTA=0.0,SSPNDD=0.0,DHDADI=0.0,DHDADO=0.0,TYPE=1.0$
 $WGSCHR TOVC=.060,DELTAY=1.30,XOVC=0.40,CLI=0.0,ALPHAI=0.0,CLALPA(1)=0.131,
  CLMAX(1)=.82,CMO=0.0,LERI=0.0025,CLAMO=.105$
 $WGSCHR CLMAXL=0.78$
 $VTPLNF CHRDTP=.420,SSPNE=.63,SSPN=.849,CHRDR=1.02,SAVSI=28.1,
  CHSTAT=.25,SWAFP=0.0,TWISTA=0.0,TYPE=1.0$
 $VTSCHR TOVC=.09,XOVC=0.40,CLALPA(1)=0.141,LERI=.0075$
 $HTPLNF CHRDTP=.253,SSPNE=.52,SSPN=.67,CHRDR=.42,SAVSI=45.0,CHSTAT=0.25,
  SWAFP=0.0,TWISTA=0.0,SSPNDD=0.0,DHDADI=0.0,DHDADO=0.0,TYPE=1.0$
 $HTSCHR TOVC=0.060,DELTAY=1.30,XOVC=0.40,CLI=0.0,ALPHAI=0.0,CLALPA(1)=.131,
  CLMAX(1)=0.82,CMO=0.0,LERI=.0025,CLAMO=.105$
CASEID ALL MOVEABLE HORIZONTAL TAIL , EXAMPLE PROBLEM 8
TRIM
NEXT CASE
```

7.9 EXAMPLE PROBLEM 9

Problem 9 consists of a lifting body configuration with a delta planform, sharp leading edge, and symmetrical diamond cross section. Pertinent data for this problem are shown in Figure 36.

```
 $FLTCON NMACH=1.0,MACH(1)=.26,NALPHA=6.0,ALSCHD(1)=-5.0,0.0,5.0,10.0,15.0,
  20.0,RNNUB(1)=1.86E6$
 $LARWB ZB=0.0,SREF=.989,DELTEP=90.0,SFRONT=.307,AR=1.076,L=1.915,SWET=2.28,
  PERBAS=2.38,SBASE=0.307,HB=.595,BB=1.03,BLF=.FALSE.,XCG=1.44,THETAD=15.0,
  ROUNDN=.FALSE.,SBS=.57,SBSLB=.0228,XCENSB=1.277,XCENW=1.277$
CASEID LIFTING BODY WITH SHARP LEADING EDGE, EXAMPLE PROBLEM 9
NEXT CASE
```

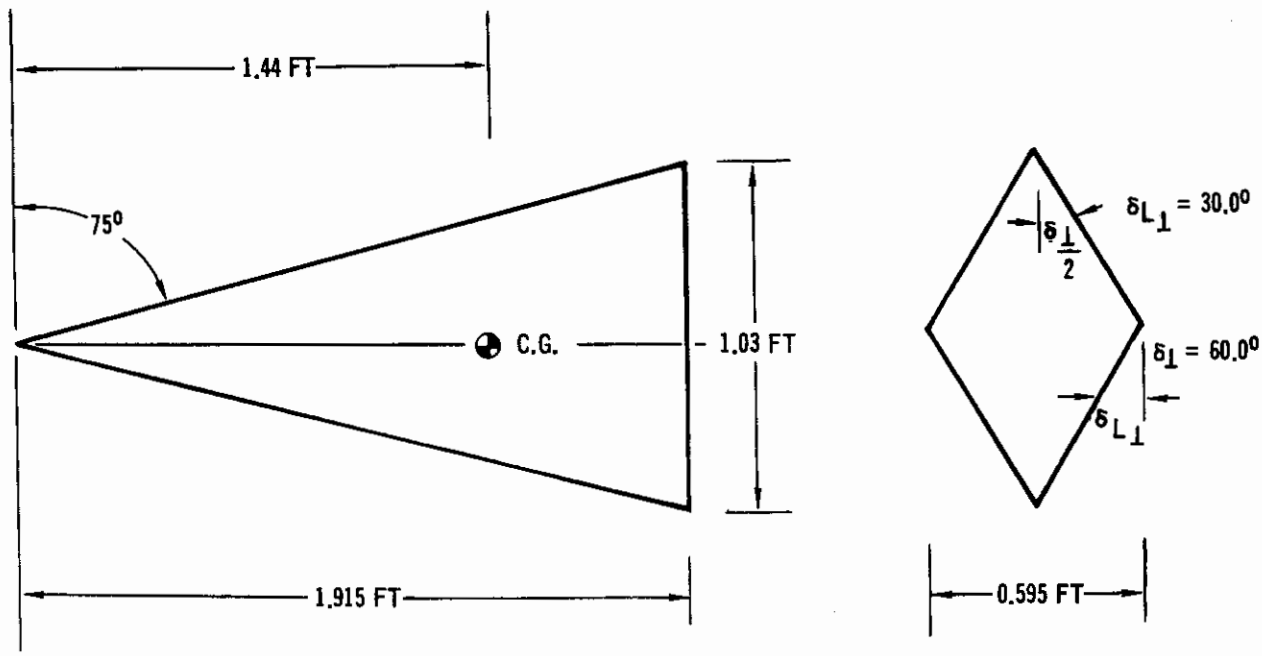

ZB = 0.0
$S_{REF} = S_{PLAN} = 0.989\ FT^2$
DELTEP = $\delta_\perp + \delta_{L_\perp} = 30.0 + 60.0 = 90.0°$
SFRØNT = $S_{BASE} = 0.307\ FT^2$
AR = 1.076
L = 1.915 FT
$S_{WET} = 2.28\ FT^2$
PERBAS = 2.38 FT
HB = 0.595
BB = 1.03
BLF = .FALSE.
XCG = 1.44
THETAD = 15.0
RØUNDN = FALSE
R3LEØB = NOT REQUIRED, SHARP LEADING EDGE
DELTAL = NOT REQUIRED, SHARP LEADING EDGE
SBS = $0.57\ FT^2$
SBSLB = $0.0228\ FT^2$
XCENSB = 1.277 FT
XCENW = 1.277 FT

FIGURE 36 EXAMPLE PROBLEM 9 DATA

7.10 EXAMPLE PROBLEM 10

This problem demonstrates the analysis of the transverse control jet in hypersonic flow located on a flat plate, as shown in Figure 37.

```
 $FLTCON MACH(1)=10.0,NMACH=1.0,RNNUB(1)=1.E7,PINF(1)=10.,HYPERS=.TRUE.$
 $TRNJET TIME(1)=1.,2.,3.,4.,5.,FC(1)=1000.,2000.,1000.,500.,200.,NT=5.,
  ALPHA(1)=0.,3.,6.,9.,13.,LAMNRJ(1)=.FALSE.,.FALSE.,.FALSE.,.FALSE.,
  .TRUE.,ME=2.39,ISP=225.,SPAN=2.0,PHE=30.,GP=1.2,CC=90.,LFP=10.$
CASEID TRANSVERSE-JET SIZING, EXAMPLE PROBLEM 10
DUMP JET
NEXT CASE
```

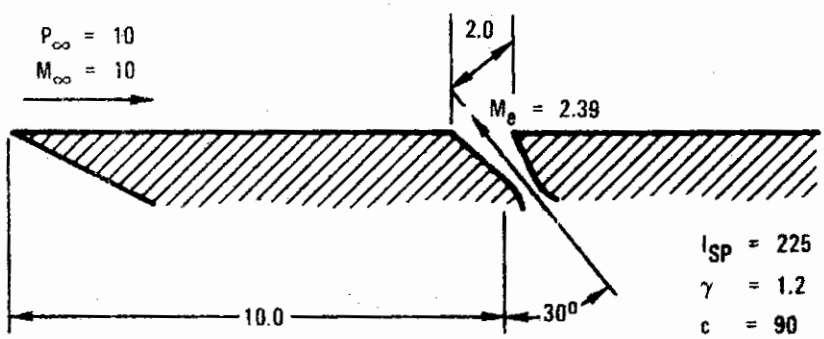

FIGURE 37 EXAMPLE PROBLEM 10 DATA

7.11 EXAMPLE PROBLEM 11

The use of a hypersonic control flap is demonstrated in this example. Pertinent geometry data is shown in Figure 38.

```
 $FLTCON NMACH=1.,MACH(1)=10.,NALPHA=5.,ALSCHD(1)=0.,5.,10.,15.,20.,
  RNNUB(1)=1.06E5,HYPERS=.TRUE.$
 $OPTINS SREF=1.,CBARR=1.$
 $HYPEFF ALITD=150000.,XHL=8.,TWOTI=3.122,CF=2.0,HDELTA(1)=0.,2.,4.,6.,
  10.,12.,16.,20.,25.,30.,LAMNR=.TRUE.,HNDLTA=10.$
CASEID FLAT PLATE WITH FLAP IN HYPERSONIC FLOW, EXAMPLE PROBLEM 11
NEXT CASE
```

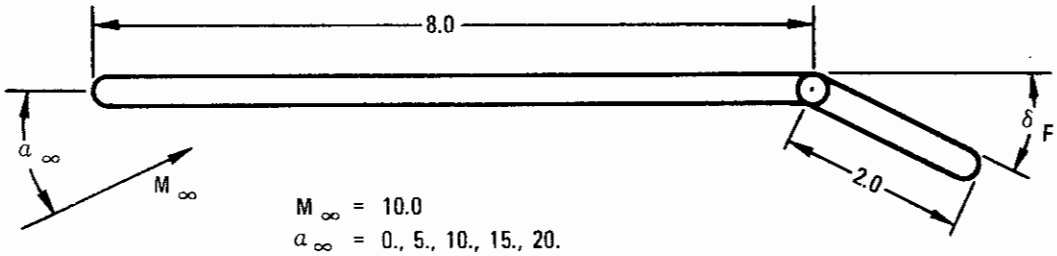

M_∞ = 10.0

α_∞ = 0., 5., 10., 15., 20.

R_{N_∞} = 1.06×10^5

h = 150,000

δ_F = 0., 2., 4., 6., 10., 12., 16., 20., 25., 30.

FIGURE 38 EXAMPLE PROBLEM 11 DATA

APPENDIX A

NAMELIST CODING RULES

Digital Datcom utilizes the namelist input technique because it is more convenient and flexible than formatted input. The namelist coding rules that follow are compatible with both CDC and IBM computer systems. The input diagnostic analysis module (CØNERR) tests all of the input and flags any violations of these rules, but it does not correct input errors. Digital Datcom will always execute the data as input by the user regardless of the errors sensed by CØNERR.

1. Namelist input data may appear in any card column from 2 to 80. Column 1 cannot be used (control cards are the only exception to this rule).
2. Namelist names cannot contain imbedded blanks and must be preceeded by a $ (& on IBM systems). The $ must appear in Column 2 and the name begins in Column 3. A blank must follow the namelist name.
3. Namelist data sets are terminated by a $ or $END (&END on IBM systems).
4. Variable values are specified using one of the two following forms:

   vname = c,

   or aname = c_1, c_2, c_3, ..., c_n,

   where: vname is a variable name,

   aname is an array name, and

   c, c_1, c_2, c_3, ..., c_n are numeric constants

   Variable names cannot contain imbedded blanks.
5. Each input constant must be immediately followed by a comma (no blanks) and must not contain imbedded blanks.
6. Namelist variables may be in any order.
7. Not all namelist variables need be input.
8. Namelist variables may appear more than once in a namelist data set. The last value will be used.
9. Multiple occurrences of the same constant in a namelist variable array can be represented in the form K*C, where K is the number of successive occurrences and C is the numeric constant. The repetition factor, K, must be an unsigned integer followed by an asterisk.

TABLE A–1 CORRECT NAMELIST CODING

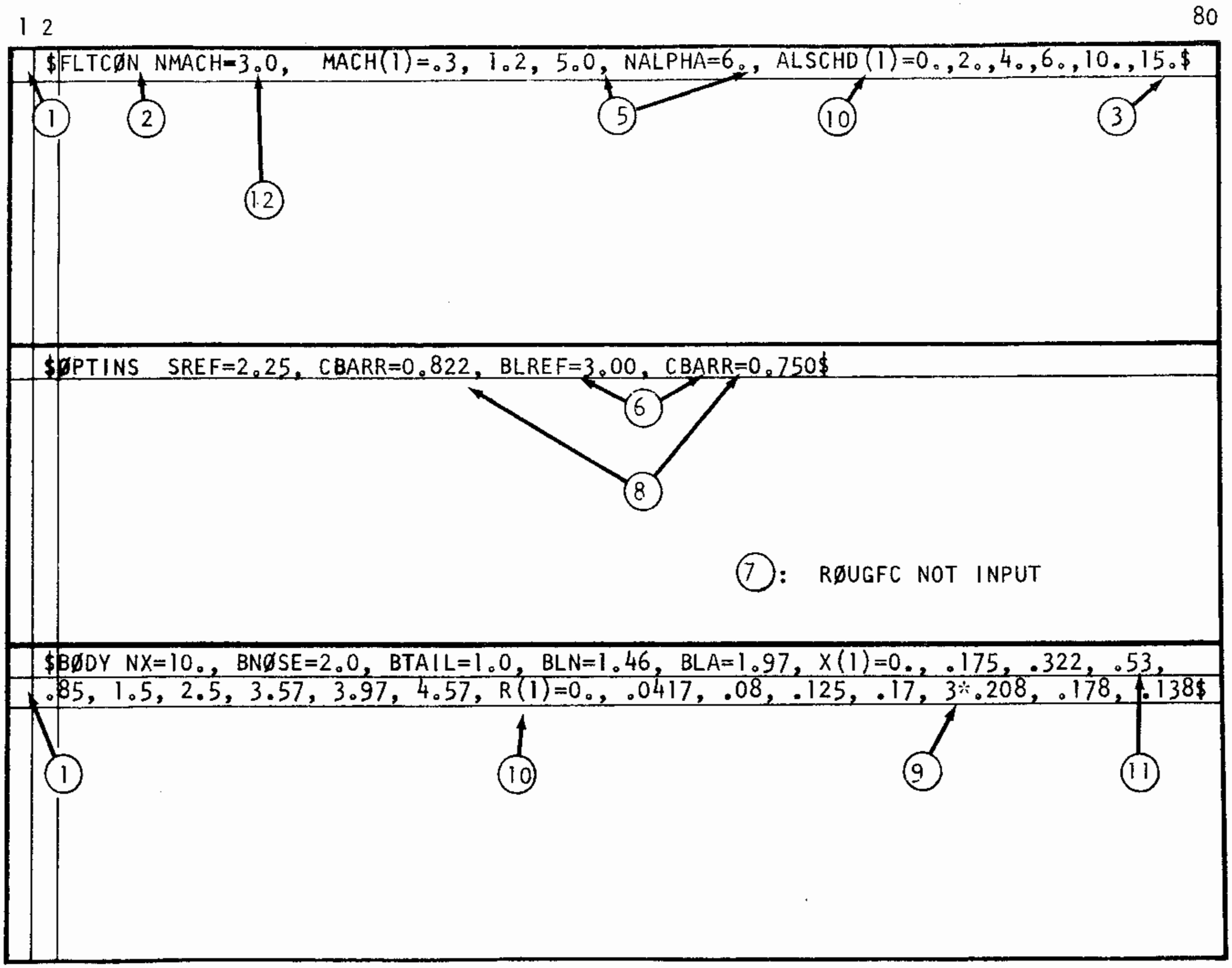

```
 $FLTCØN NMACH=3.0,  MACH(1)=.3, 1.2, 5.0, NALPHA=6., ALSCHD(1)=0.,2.,4.,6.,10.,15.$
 $ØPTINS  SREF=2.25, CBARR=0.822, BLREF=3.00, CBARR=0.750$
 $BØDY NX=10., BNØSE=2.0, BTAIL=1.0, BLN=1.46, BLA=1.97, X(1)=0., .175, .322, .53,
.85, 1.5, 2.5, 3.57, 3.97, 4.57, R(1)=0., .0417, .08, .125, .17, 3*.208, .178, .138$
```

⑦: RØUGFC NOT INPUT

10. On CDC systems, if all the elements of an array are not specified, the array name must be subscripted with the index for the first element to be filled; i.e., aname (i)=C_i, C_{i+1},..., C_n, where i is the index corresponding to C_i. Array dimensions for all namelist variables in Digital Datcom are specified for each namelist name in Section 3 of this report.

11. Each card that is to be continued must end with constant followed by a comma.

12. All Digital Datcom numeric constants should specify a decimal point. All variables, except logical variables are declared type "REAL".

Examples illustrating these rules are shown in Tables A-1 and A-2. Each namelist rule is designated by its number.

TABLE A–2 INCORRECT NAMELIST CODING

```
1 2                                                                                                                                  80
$ FLTCØN N MACH=3, MACH=.3, 1.2, 5.0 NALPHA=6., ALSCHD(1)=0., 2., 4., 6., 10., 15. $
```

(2) BLANKS NOT ALLOWED.

(5) NAMELIST DATA NOT SEPARATED BY A COMMA.

(10) ENTIRE ARRAY NOT FILLED, SUBSCRIPT MISSING.

(12) ALL INPUTS MUST SPECIFY A DECIMAL POINT.

(1) COLUMN ONE CANNOT BE USED

```
$ ØPT INS SREF=2.25, CBARR=0.822, BLREF=3.00, CBARR=0.750
```

(2) BLANKS NOT ALLOWED

(3) NO TERMINATION $

```
$BØDYNX=10., BNØSE=2.0, BTAIL=1.0, BLN=1.46, BLA=1.97, X(1)=0., .175, .322, .53
. 5, 1.5, 2.5, 3.57, 3.97, 4.57, R(1)=0., .0417, .08, .125, .17,3*.208, .178, .138$
```

(2) SPACE MUST FOLLOW NAMELIST NAME.

(11) NO COMMA FOR CONTINUATION

(1) COLUMN ONE CANNOT BE USED.

APPENDIX D

USER KIT

This section contains printed coding sheets of all inputs for Digital Datcom. These sheets can either be used as a quick check of inputs, or copied and used directly by users.

No attempt has been made to single out those variables which must be defined (or, conversely, not input) because of the enormous number of variable input combinations available. It is the responsibility of the user to assure that his data deck follows the description and limitations described in this user's manual, the method implementation manual (Volume II) and the Datcom.

In using these sheets, the limitations and requirements of namelist inputs (discussed in Appendix A) and of each namelist/control card (Section 3) should be observed. Through each variable is assigned a separate line on these coding sheets, they are not required to appear on separate punched cards. They may be written as multiple varaibles per card, as shown in the example problems, as long as the namelist coding rules given in Appendix A are observed.

NOTE: ALL EVEN PAGES BLANK IN APPENDIX D

GROUP I INPUTS

NUMBER OF MACH NUMBERS OR VELOCITIES TO BE RUN FREESTREAM MACH NUMBERS (NMACH VALUES)	NMACH=
	MACH(1)=
FREESTREAM VELOCITIES (NMACH VALUES)	VINF(1)=
NUMBER OF ANGLES OF ATTACK TO BE RUN ANGLES OF ATTACK (NALPHA VALUES)	NALPHA=
	ALSCHD(1)=
REYNOLDS NUMBER PER UNIT LENGTH (NMACH VALUES)	RNNUB(1)=
NUMBER OF ALTITUDES TO BE RUN GEOMETRIC ALTITUDES (NALT VALUES)	NALT=
	ALT(1)=
FREESTREAM STATIC PRESSURE (NALT VALUES)	PINF(1)=
FREESTREAM STATIC TEMPERATURE (NALT VALUES)	TINF(1)=
.TRUE. FOR HYPERSONIC ANALYSIS FOR M ≥ 1.4	HYPERS=
UPPER MACH LIMIT FOR SUBSONIC ANALYSIS	STMACH=
LOWER MACH LIMIT FOR SUPERSONIC ANALYSIS	TSMACH=
DRAG DUE TO LIFT TRANSITION FLAG	TR=
VEHICLE WEIGHT	WT=
FLIGHT PATH ANGLE	GAMMA=
LOOP CONTROL: (1) VARY h & M, (2) VARY M, (3) VARY h (FOR LØØP = 1, NALT MUST EQUAL NMACH)	LØØP=
	$END
EQUIVALENT SAND ROUGHNESS OF SURFACE	$ØPTINS
	RØUGFC=
REFERENCE AREA	SREF=
LONGITUDINAL REFERENCE LENGTH	CBARR=
LATERAL REFERENCE LENGTH	BLREF=
	$END

NOTES: Leave Unused Columns Blank

All inputs require decimal point, either -X.XXX or -X.XXE-YY.

Refer to users manual (Volume I) for complete description of all variables.

Column 1 must be blank. See Appendix B of Volume I for namelist coding rules.

GROUP II INPUTS

LONGITUDINAL C.G. LOCATION (MRC)
VERTICAL C.G. LOCATION
LONGITUDINAL LOCATION OF THEORETICAL WING APEX
VERTICAL LOCATION OF THEORETICAL WING APEX
WING ROOT INCIDENCE
LONGITUDINAL LOCATION OF THEORETICAL H.T. APEX
VERTICAL LOCATION OF THEORETICAL H.T. APEX
H.T. ROOT INCIDENCE
LONGITUDINAL LOCATION OF THEORETICAL V.T. APEX
LONGITUDINAL LOCATION OF THEORETICAL V.F. APEX
VERTICAL LOCATION OF THEORETICAL V.T. APEX
VERTICAL LOCATION OF THEORETICAL V.F. APEX
SCALE FACTOR
.TRUE.FOR V.T. ABOVE REF. PLANE
LONGITUDINAL LOCATION OF H.T. HINGE AXIS

NUMBER OF LONGITUDINAL STATIONS
LONGITUDINAL DISTANCE OF EACH STATION (NX VALUES)

CROSS-SECTIONAL AREA AT EACH STATION (NX VALUES)

LENGTH OF PERIPHERY AT EACH STATION (NX VALUES)

PLANFORM HALF-WIDTH AT EACH STATION (NX VALUES)

UPPER BODY SURFACE Z COORDINATES (NX VALUES)

LOWER BODY SURFACE Z COORDINATES (NX VALUES)

NOSE TYPE: (1) CONICAL (2)OGIVE
TAIL TYPE: (1) CONICAL (2)OGIVE
BODY NOSE LENGTH
BODY CYCLINDRICAL SECTION LENGTH
NOSE BLUNTNESS DIAMETER
M_D CALCULATION TYPE
METHOD TYPE: (1) EXISTING (2) JOERGENSON

1-10	11-20	21-30	31-40	41-50	51-60	61-70	71-80
$SYNTHS							
XCG=							
ZCG=							
XW=							
ZW=							
ALIW=							
XH=							
ZH=							
ALIH=							
XV=							
XVF=							
ZV=							
ZVF=							
SCALE=							
VERTUP=							
HINAX=							
$END							
$BØDY							
NX=							
X(1)=							
S(1)=							
P(1)=							
R(1)=							
ZU(1)=							
ZL(1)=							
BNØSE=							
BTAIL=							
BLN=							
BLA=							
DS=							
ITYPE=							
METHØD=							
$END							

NOTES: Leave Unused Columns Blank

All inputs require decimal point, either -X.XXX or -X.XXE-YY.

Refer to users manual (Volume I) for complete description of all variables.

Column 1 must be blank. See Appendix B of Volume I for namelist coding rules.

GROUP II INPUTS (continued)

TIP CHORD	CHRDTP=
OUTBOARD PANEL SEMI-SPAN	SSPNØP=
EXPOSED PANEL SEMI-SPAN	SSPNE=
THEORETICAL PANEL SEMI-SPAN	SSPN=
CHORD AT BREAK-POINT	CHRDBP=
ROOT CHORD	CHRDR=
INBOARD PANEL SWEEP ANGLE	SAVSI=
OUTBOARD PANEL SWEEP ANGLE	SAVSØ=
REFERENCE CHORD STATION FOR SWEEP ANGLES INPUT	CHSTAT=
TWIST ANGLE	TWISTA=
OUTBOARD PANEL SEMI-SPAN WITH DIHEDRAL	SSPNDD=
INBOARD PANEL DIHEDRAL ANGLE	DHDADI=
OUTBOARD PANEL DIHEDRAL ANGLE	DHDADØ=
PLANFORM TYPE: (1) STRAIGHT (2) DOUBLE DELTA (3) CRANKED	TYPE=

```
$WGPLNF
 CHRDTP=
 SSPNØP=
 SSPNE=
 SSPN=
 CHRDBP=
 CHRDR=
 SAVSI=
 SAVSØ=
 CHSTAT=
 TWISTA=
 SSPNDD=
 DHDADI=
 DHDADØ=
 TYPE=
$END
```

TIP CHORD	CHRDTP=
OUTBOARD PANEL SEMI-SPAN	SSPNØP=
EXPOSED PANEL SEMI-SPAN	SSPNE=
THEORETICAL PANEL SEMI-SPAN	SSPN=
CHORD AT BREAK-POINT	CHRDBP=
ROOT CHORD	CHRDR=
INBOARD PANEL SWEEP ANGLE	SAVSI=
OUTBOARD PANEL SWEEP ANGLE	SAVSØ=
REFERENCE CHORD STATION FOR SWEEP ANGLES INPUT	CHSTAT=
TWIST ANGLE	TWISTA=
OUTBOARD PANEL SEMI-SPAN WITH DIHEDRAL	SSPNDD=
INBOARD PANEL DIHEDRAL ANGLE	DHDADI=
OUTBOARD PANEL DIHEDRAL ANGLE	DHDADØ=
PLANFORM TUPE: (1) STRAIGHT (2) DOUBLE DELTA (3) CRANKED	TYPE=
FUSELAGE AREA BETWEEN MACH LINES	SHB(1)=
EXTENDED FUSELAGE AREA BETWEEN MACH LINES	SEXT(1)=
LONGITUDINAL DISTANCE FROM C.G. TO CENTROID OF FUSELAGE AREA BETWEEN MACH LINES	RLPH(1)=

```
$HTPLNF
 CHRDTP=
 SSPNØP=
 SSPNE=
 SSPN=
 CHRDBP=
 CHRDR=
 SAVSI=
 SAVSØ=
 CHSTAT=
 TWISTA=
 SSPNDD=
 DHDADI=
 DHDADØ=
 TYPE=
 SHB(1)=

 SEXT(1)=

 RLPH(1)=

$END
```

NOTES: Leave Unused Columns Blank

All inputs require decimal point, either -X.XXX or -X.XXE-YY.

Refer to users manual (Volume I) for complete description of all variables.

Column 1 must be blank. See Appendix B of Volume I for namelist coding rules.

GROUP II INPUTS (continued)

	1-10	11-20	21-30	31-40	41-50	51-60	61-70	71-80
	$VTPLNF							
TIP CHORD	CHRDTP=							
OUTBOARD PANEL SEMI-SPAN	SSPNØP=							
EXPOSED PANEL SEMI-SPAN	SSPNE=							
THEORETICAL PANEL SEMI-SPAN	SSPN=							
CHORD AT BREAK-POINT	CHRDBP=							
ROOT CHORD	CHRDR=							
INBOARD PANEL SWEEP ANGLE	SAVSI=							
OUTBOARD PANEL SWEEP ANGLE	SAVSØ=							
REFERENCE CHORD STATION FOR SWEEP ANGLES INPUT	CHSTAT=							
PLANFORM TYPE: (1) STRAIGHT (2) DOUBLE DELTA (3) CRANKED	TYPE=							
EXPOSED PANEL AREA BETWEEN MACH LINES OF WING	SVWB(1)=							
EXPOSED PANEL AREA NOT INFLUENCED BY WING OR H.T.	SVB(1)=							
EXPOSED PANEL AREA BETWEEN MACH LINES OF H.T.	SVHB(1)=							
	$END							
	$VFPLNF							
TIP CHORD	CHRDTP=							
OUTBOARD PANEL SEMI-SPAN	SSPNØP=							
EXPOSED PANEL SEMI-SPAN	SSPNE=							
THEORETICAL PANEL SEMI-SPAN	SSPN=							
CHORD AT BREAK-POINT	CHRDBP=							
ROOT CHORD	CHRDR=							
INBOARD PANEL SWEEP ANGLE	SAVSI=							
OUTBOARD PANEL SWEEP ANGLE	SAVSØ=							
REFERENCE CHORD STATION FOR SWEEP ANGLE INPUT	CHSTAT=							
PLANFORM TYPE: (1) STRAIGHT (2) DOUBLE DELTA (3) CRANKED	TYPE=							
EXPOSED PANEL AREA BETWEEN MACH LINES OF WING	SVWB(1)=							
EXPOSED PANEL AREA NOT INFLUENCED BY WING OR H.T.	SVB(1)=							
EXPOSED PANEL AREA BETWEEN MACH LINES OF H.T.	SVHB(1)=							
	$END							

NOTES: Leave Unused Columns Blank

All inputs require decimal point, either -X.XXX or -X.XXE-YY.

Refer to users manual (Volume I) for complete description of all variables.

Column 1 must be blank. See Appendix B of Volume I for namelist coding rules.

GROUP II INPUTS (continued)

	1-10	11-20	21-30	31-40	41-50	51-60	61-70	71-80
	$WG.SCHR.							
MAXIMUM THICKNESS (INBOARD PANEL)	TØVC=							
DIFFERENCE IN ORDINATES AT 6.00% AND 0.15% CHORD	DELTAY=							
CHORD LOCATION AT MAXIMUM THICKNESS (INBOARD PANEL)	XØVC=							
DESIGN LIFT COEFFICIENT	CL.I=							
ANGLE OF ATTACK AT DESIGN LIFT COEFFICIENT	ALPHAI=							
SECTION LIFT-CURVE-SLOPE (NMACH VALUES)	CLALPA(1)=							
SECTION MAXIMUM LIFT COEFFICIENT (NMACH VALUES)	CLMAX(1)=							
SECTION ZERO LIFT PITCHING MOMENT COEFFICIENT (INBOARD PANEL)	CMØ=							
LEADING EDGE RADIUS (INBOARD PANEL)	LERI=							
LEADING EDGE RADIUS (OUTBOARD PANEL)	LERØ=							
.TRUE. IF CAMBERED AIRFOIL	CAMBER=							
MAXIMUM THICKNESS (OUTBOARD PANEL)	TØVCØ=							
CHORD LOCATION AT MAXIMUM THICKNESS (OUTBOARD PANEL)	XØVCØ=							
SECTION ZERO LIFT PITCHING MOMENT COEFFICIENT (OUTBOARD PANEL)	CMØT=							
MAXIMUM LEFT COEFFICIENT AT MACH EQUALS ZERO	CLMAXL=							
SECTION LIFT CURVE-SLOPE AT MACH EQUALS ZERO	CLAMØ=							
PLANFORM EFFECTIVE THICKNESS RATIO	TCEFF=							
SHARP-NOSED AIRFOILS WAVE-DRAG FACTOR	KSHARP=							
SURFACE SLOPE AT 0%, 20%, 40%, 60%, 80%, and 100% CHORD	SLØPE(1)=							
ASPECT RATIO CLASSIFICATION FACTOR	ARCL=							
SECTION AERODYNAMIC CENTER	XAC(1)=							
DATCOM METHOD FOR DOWNWASH: 1, 2 OR 3	DWASH=							
MAXIMUM AIRFOIL CAMBER	YCM=							
CONICAL CAMBER DESIGN LIFT COEFFICIENT	CLD=							
TYPE OF AIRFOIL COORDINATES: (1) COORDINATES (2) MEAN THICK	TYPEIN=							
NUMBER OF SECTION INPUT POINTS (50 MAX)	NPTS=							
ABSCISSAS OF INPUT POINTS (NPTS VALUES)	XCØRD(1)=0.,.							
UPPER SURFACE ORDINATES (NPTS VALUES)	YUPPER(1)=0.,.							
LOWER SURFACE ORDINATES (NPTS VALUES)	YLØWER(1)=0.,.							
MEAN LINE ORDINATES (NPTS VALUES)	MEAN(1)=0.,.							
THICKNESS DISTRIBUTION ORDINATES (NPTS VALUES)	THICK(1)=0.,.							
	$END							

NOTES: Leave Unused Columns Blank

All inputs require decimal point, either -X.XXX or -X.XXE-YY.

Refer to users manual (Volume I) for complete description of all variables.

Column 1 must be blank. See Appendix B of Volume I for namelist coding rules.

APPENDIX B

AIRFOIL SECTION CHARACTERISTICS ESTIMATION TECHNIQUES

B.1 INTRODUCTION

The Airfoil Section Module enables the user to specify the wing, horizontal tail, vertical tail, and/or ventral fin airfoil section characteristics by either specifying the NACA designation or the section coordinates. The use of this module can eliminate the need of defining most of the airfoil section characteristics for the namelists WGSCHR, HTSCHR, VTSCHR, and VFSCHR.

The module was written to maintain user flexibility. The user can supply data for any section characteristic and utilize the module to supply the remaining parameters. User supplied data will always take precedence.

This module can calculate the section characteristics of virtually an unlimited number conventional shaped airfoils, whereas, Datcom methods exist for only a limited number of airfoil sections.

B.2 MODULE METHODS

B.2.1 Geometric Properties

User inputs, either by NACA designation or airfoil geometry coordinates (see Sections 2.4 and 3.5), are used to calculate the airfoil upper and lower surface cartesian coordinates, and thickness and camber line distribution. Surface coordinates are determined from the NACA designation using the methods of Kinsey and Bowers, Reference 5. These coordinates are then used to calculate the Digital Datcom namelist input variables Δy, $(x/c)_{max}$ and $(t/c)_{max}$. The leading edge radius (R_{LE}) is calculated internally for NACA specified sections, and has been left as a user input for other sections. However, the module will calculate R_{LE} using the input section coordinates if the variable is not input. Figures B-1 and B-2 are reproduced from Datcom (Datcom Figures 2.2.1-7 and 2.2.1-8) and presents R_{LE} and Δy for several standard airfoils.

B.2.2 Aerodynamic Section Characteristics

The pressure distribution about the airfoil is calculated in incompressible, inviscid flow by the method of singularities (References 2-4). The distribution of the singularities is derived from a conformal transformation of thirty-two fixed points on the airfoil to points equally spaced

about a circle in a transformed plane. Since the solution for inviscid flow about a circle is known, the velocities about the airfoil are calculated by an inverse transformation (back into the physical plane).

In order to adequately define the airfoil shape and ensure a smooth continuous geometric interpolation for the transformation, a curve describing the airfoil surface is constructed. This curve is constructed by fitting the overall geometry by a left-hand parabola joined to a series of cubic curves, and finally a right-hand parabola. This technique yields a function which is continuous and has continuous derivatives everywhere.

The velocity and pressure distribution derived from the conformal transformation analysis are used to calculate the airfoil section ideal aerodynamic parameters for Digital Datcom. They are also used to calculate the remaining section aerodynamic parameters at the zero-lift angle of attack for the user specified Mach and Reynolds numbers. The viscous correction to section lift curve slope, from Kinsey and Bowers (Reference 5), is given as follows:

$$\frac{C_{\ell_\alpha}}{(C_{\ell_\alpha})_{Theoretical}} = 1-[\ln(Re/10^5)]^n\{.232 + 1.785\ TAN(\tau_a/2)-2.95\ TAN^2(\tau_a/2)\}$$

$$n = -1 + (5/2)\ TAN(\tau_a/2)$$

Re = Reynolds Number

T_{90} = Thickness at X = .9c

T_{99} = Thickness at X = .99c

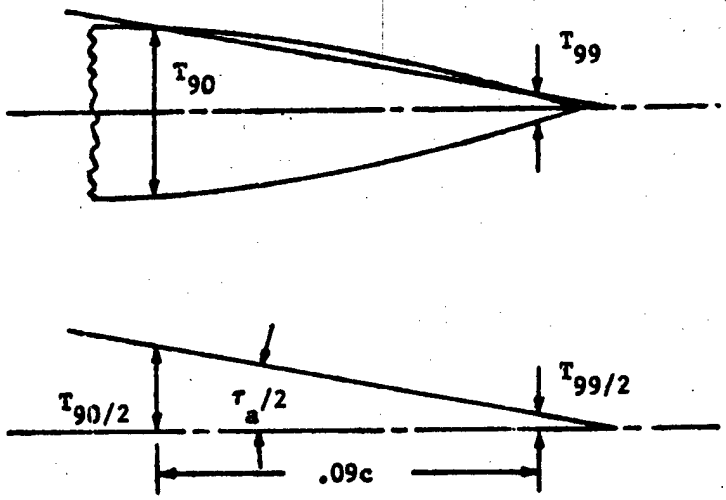

In addition to the viscous correction, a 5% correlation factor (suggested in Datcom, page 4.1.1.2-2) is applied to bring the results in line with experimental data.

The airfoil section maximum lift, $c_{\ell_{max}}$, is calculated using the Datcom method (Datcom Section 4.1.1.4). The equation for $c_{\ell_{max}}$ is:

$$c_{\ell_{max}} = (c_{\ell_{max}})_{base} + \Delta_1 c_{\ell_{max}} + \Delta_2 c_{\ell_{max}} + \Delta_3 c_{\ell_{max}} + \Delta_4 c_{\ell_{max}} + \Delta_5 c_{\ell_{max}}$$

Individual terms are discussed below.

$(c_{\ell_{max}})_{base}$ is obtained from Figure B-3 as a function of Δy and position of maximum thickness. The Δy parameter for a cambered airfoil is the same as that of the corresponding uncambered airfoil, that is, the uncambered airfoil having the same thickness distribution. The $(c_{\ell_{max}})_{base}$ value is for uncambered airfoils with smooth leading edges at 9×10^6 Reynolds number and low speed conditions.

$\Delta_1 c_{\ell_{max}}$ accounts for the effect of camber for airfoils having the maximum thickness at 30 percent chord. Figure B-4 gives this parameter as a function of percent camber and maximum camber location.

$\Delta_2 c_{\ell_{max}}$ amounts to an increment by which $\Delta_1 c_{\ell_{max}}$ must be adjusted for airfoils with maximum thickness located at a position other than 30 percent chord (if maximum thickness is at 30 percent chord or $\Delta_1 c_{\ell_{max}}$ is zero, $\Delta_2 c_{\ell_{max}}$ is zero), presented in Figure B-5.

$\Delta_3 c_{\ell_{max}}$, presented in Figure B-6, gives the list increment due to Reynolds number for Reynolds numbers other than 9×10^6.

$\Delta_4 c_{\ell_{max}}$, shown in Figure B-7, gives the lift increment due to roughness. The roughness in this case is the standard NACA roughness and is presented by 0.011 inch grit applied over the first 8 percent of chord. The curve is only an indication of roughness effect. Actual roughnesses vary considerably, and the effects may be quite different from those shown. As a result, this parameter is not calculated.

$\Delta_5 c_{\ell_{max}}$ is a correction for Mach numbers greater than approximately 0.2. No generalized charts for Mach effects are available in Datcom, therefore, this parameter is not calculated by Digital Datcom. The lift increment due to Mach number should be obtained from test data of similar airfoils when available. Figure B-8 shows representative effects on selected airfoils.

As a possible alternate to the above procedure, $c_{\ell_{max}}$ for standard airfoils at Mach numbers $\leq$ 0.20 and a Reynolds number of nine million are given in Datcom Section 4.1.1.4. These coefficients need be corrected only for Reynolds number, roughness, and Mach number.

B.3 LIMITATIONS AND MODULE DEFAULTS

B.3.1 Crest Critical Conditions

When calculating the airfoil section characteristics of user defined or NACA airfoils, the transonic crest critical conditions are computed (Niedling, Reference 6).

The crest critical Mach number is precisely defined as that free stream Mach number for which local sonic flow is first reached at the airfoil surface crest on the assumption of shock free flow. Its significance is founded on its relation to the drag rise Mach number.

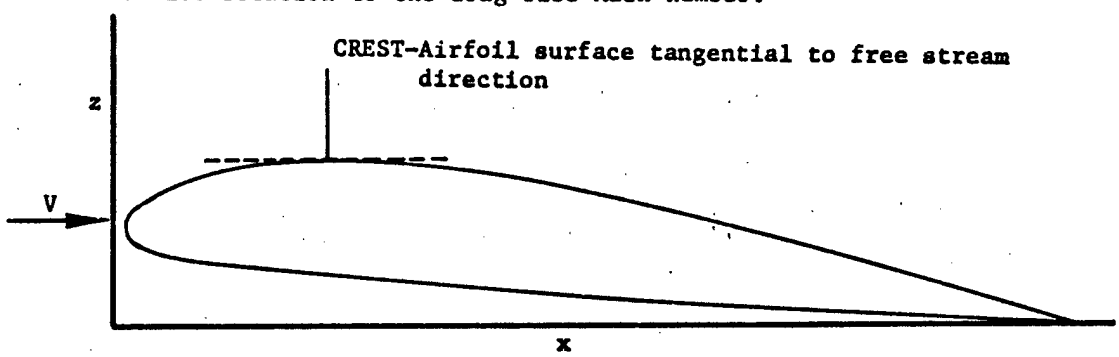

If the user requests data for subsonic Mach numbers greater than the crest critical Mach number, airfoil section data at the crest critical Mach number are used.

B.3.2 Limitations on Geometry

When specifying the airfoil geometry by cartesian coordinates or thickness/camber distribution, the user should input data near the airfoil leading edge to prevent the surface curve-fits from calculating an infinite slope. This is easily accomplished by supplying data at X-stations 0., 0.001, 0.002, and 0.003. The user should note that results degrade with increasing camber or thickness. Generally, accuracy may deteriorate for cambers greater than 6% chord or maximum thickness greater than 12% chord.

B.3.3 Transonic and Supersonic Airfoils

The inputs for transonic and supersonic airfoils consist primarily of geometry inputs. If an airfoil is defined by coordinates or the NACA card,

all of the required inputs execpt for TCEFF are computed. Procedures for computing specific section data are given below.

Namelist variable TCEFF is the effective thickness ratio of the planform expressed as a fraction of chord. For straight tapered planforms it equals the mean thickness ratio. For nonstraight tapered planforms, the effective thickness ratio is defined in terms of the basic planform and is given by

$$\text{TCEFF} = \left[\frac{\int_0^{b/2} \left(\frac{t}{c}\right)^2 c \, dy}{\int_0^{b/2} c \, dy}\right]^{1/2} = \left[\frac{\int_0^{b/2} \left(\frac{t}{c}\right)^2 c \, dy}{\frac{S}{2}}\right]^{1/2}$$

The basic planform is the straight-tapered planform obtained by extending the leading and trailing edges of the outboard panel into the vehicle centerline. TCEFF is used to calculate wave drag in the supersonic and hypersonic regimes. A graphical procedure for determining TCEFF is summarized in Figure B-9. Section (t/c) is assumed to be $(t/c)_{EFF}$ of the planform by the ASM if it is not user defined.

Namelist variable KSHARP is a wave-drag factor for sharp nosed airfoils and should not be specified for round-nosed airfoils. For wings with variable thickness ratios, KSHARP should be defined for the section at the mean chord. This parameter is used to calculate wave drag for sharp-nosed airfoils in the supersonic and hypersonic speed regimes. Values of KSHARP for several sharp-nosed airfoils are presented in Figure 8.

Namelist variable SLØPE is the angle between the chord plane and the local tangent at the airfoil surface at 0, 20, 40, 60, 80 and 100 percent chord expressed in degrees. Angles are positive when the local tangents intersect the chord plane ahead of the reference chord point for the tangent. SLØPE parameters are used to calculate supersonic downwash effects and thus are required only for configurations which have a horizontal tail. For cambered airfoils, the upper-surface slopes should be used if the tail is above the wing and conversely lower-surface slopes should be used in the tail is below the wing. Configurations with wing and tail located at the same z-location should have lower surface values specified. If the combination of SLØPE, angle of attack, and Mach number results in a detached

shock, no wing-body-tail results will be generated and an appropriate message will be output. Reflexed trailing edges are not permitted. This variable is automatically computed for a user specified airfoil, either by coordinates or use of the "NACA" card.

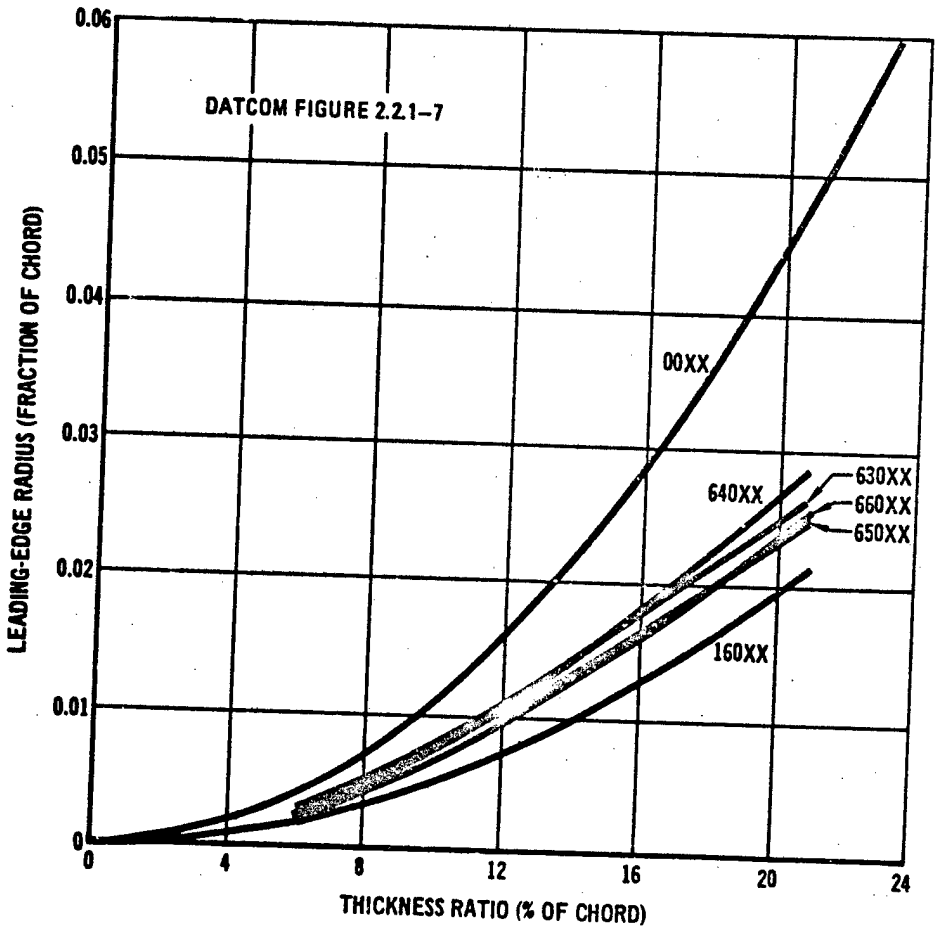

FIGURE B–1 VARIATION OF LEADING-EDGE RADIUS WITH THICKNESS RATIO OF AIRFOILS

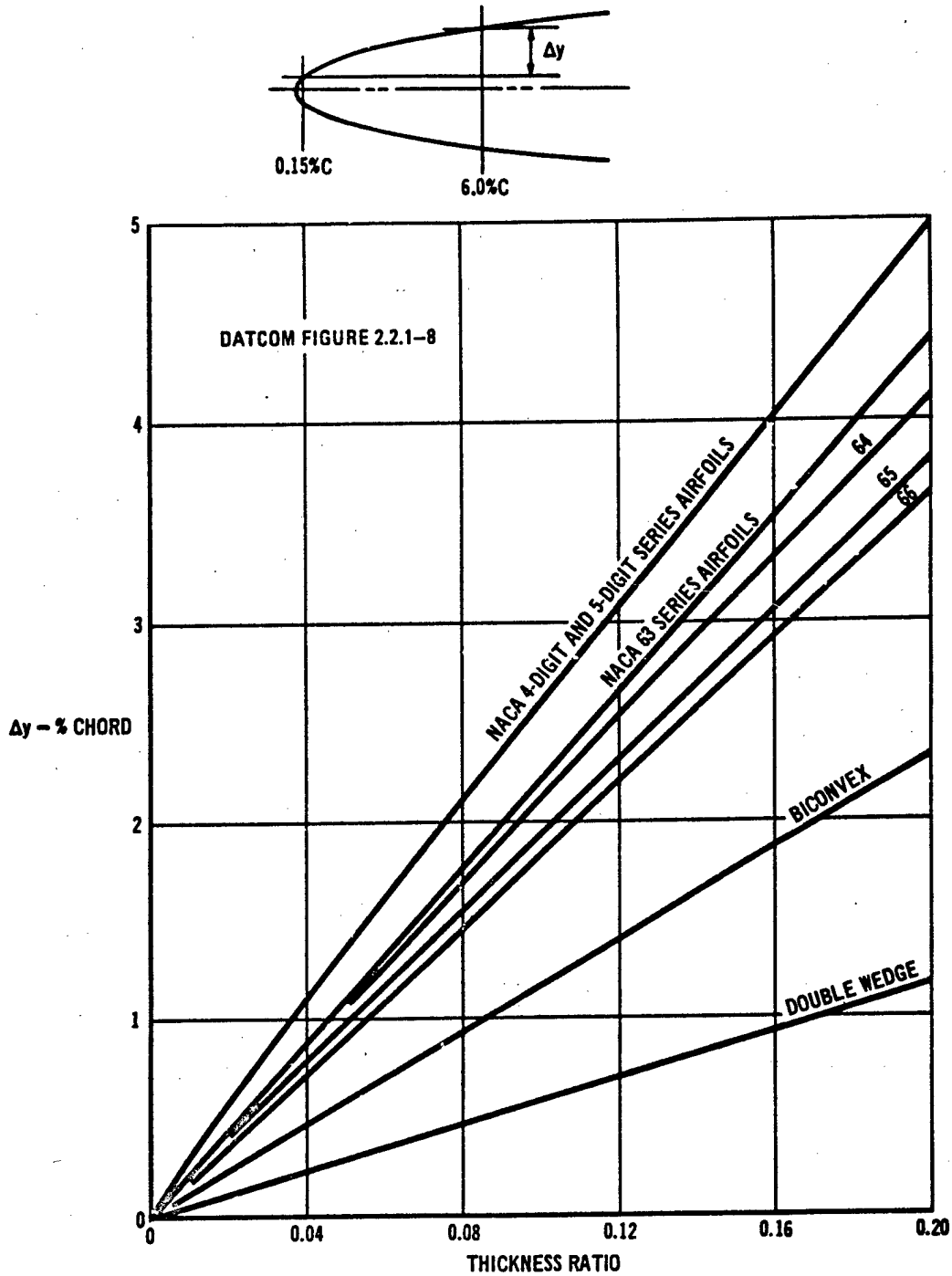

FIGURE B–2 VARIATION OF LEADING-EDGE SHARPNESS PARAMETER WITH AIRFOIL THICKNESS RATIO

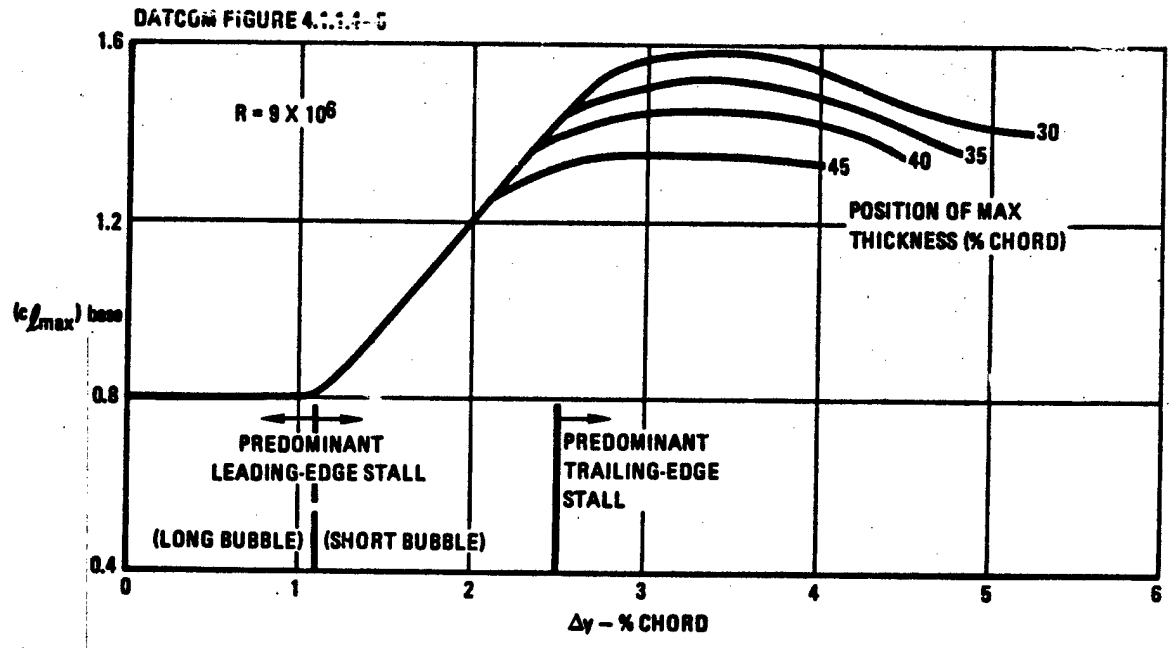

FIGURE B–3 AIRFOIL SECTION MAXIMUM LIFT COEFFICIENT OF UNCAMBERED AIRFOILS

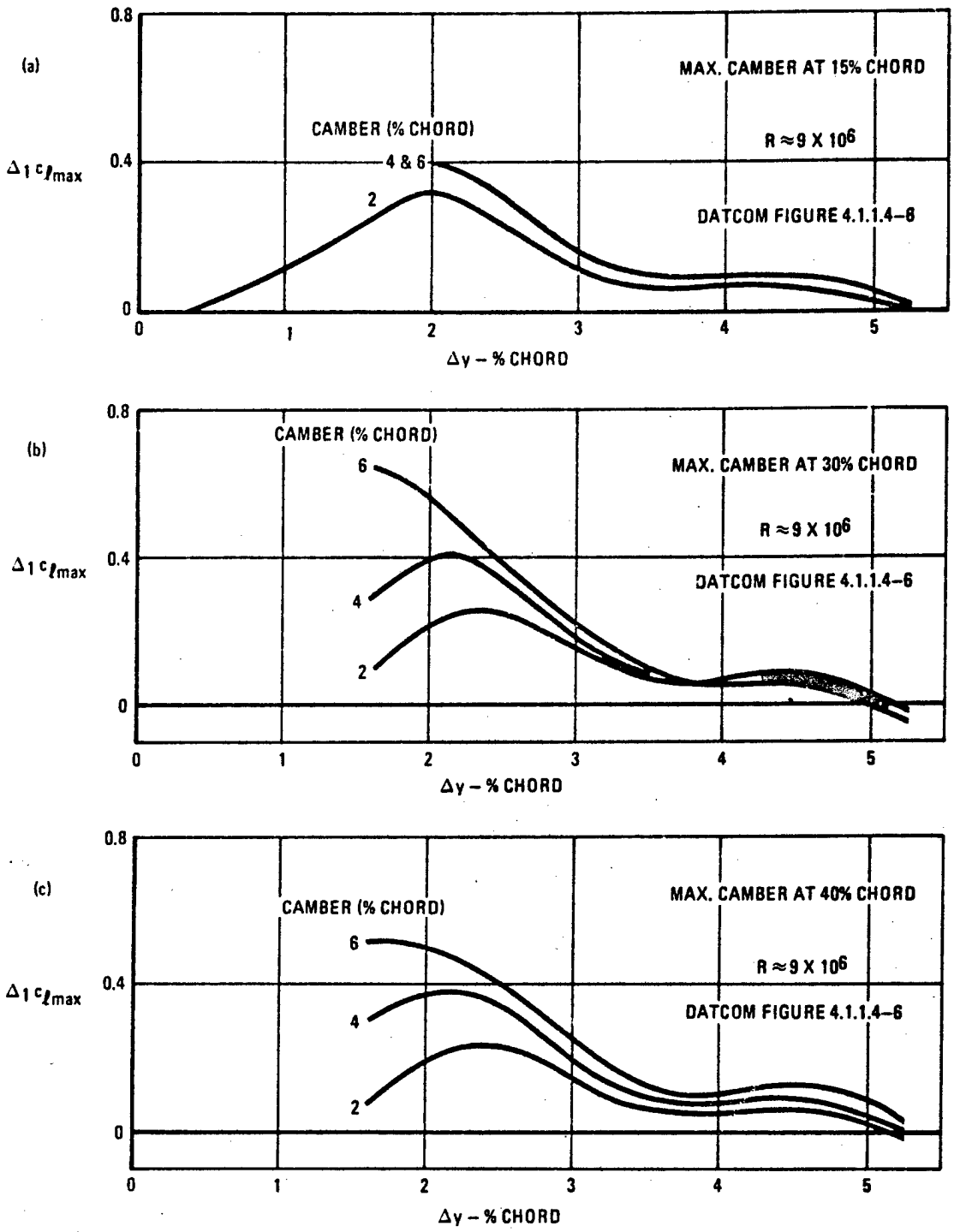

FIGURE B–4 EFFECT OF AIRFOIL CAMBER LOCATION AND AMOUNT ON SECTION MAXIMUM LIFT

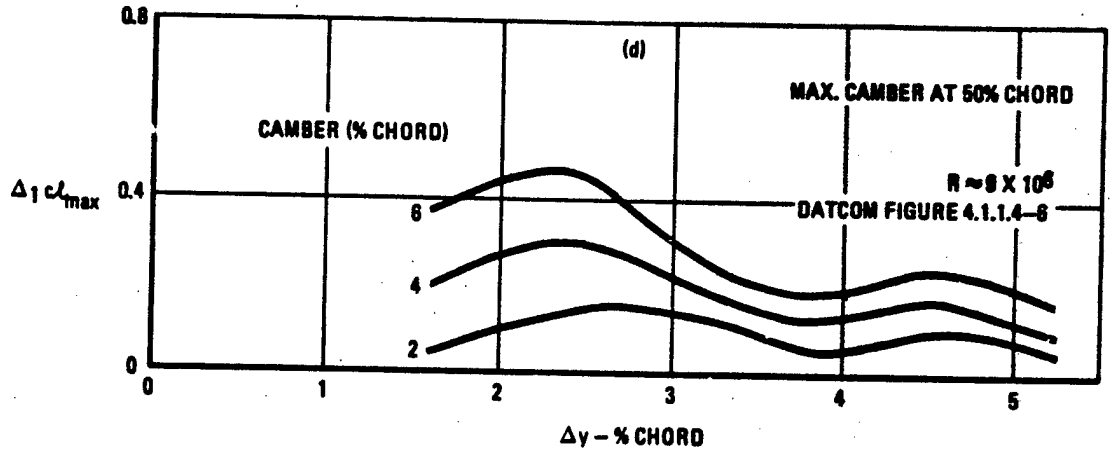

FIGURE B–4 EFFECT OF AIRFOIL CAMBER LOCATION AND AMOUNT ON SECTION MAXIMUM LIFT (CONCLUDED)

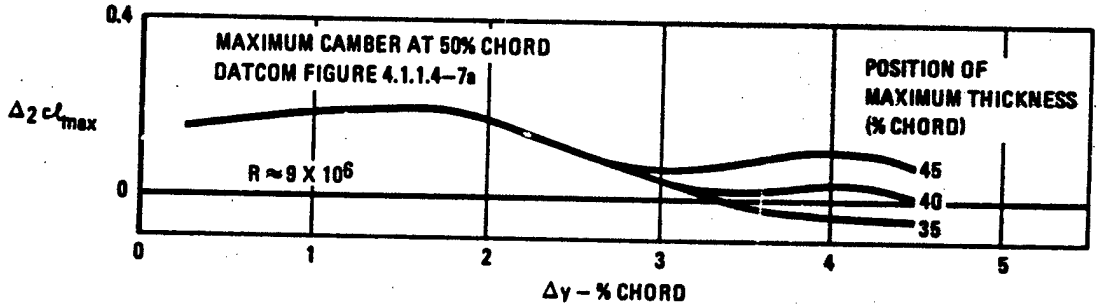

FIGURE B–5 EFFECT OF POSITION OF MAXIMUM THICKNESS ON SECTION MAXIMUM LIFT

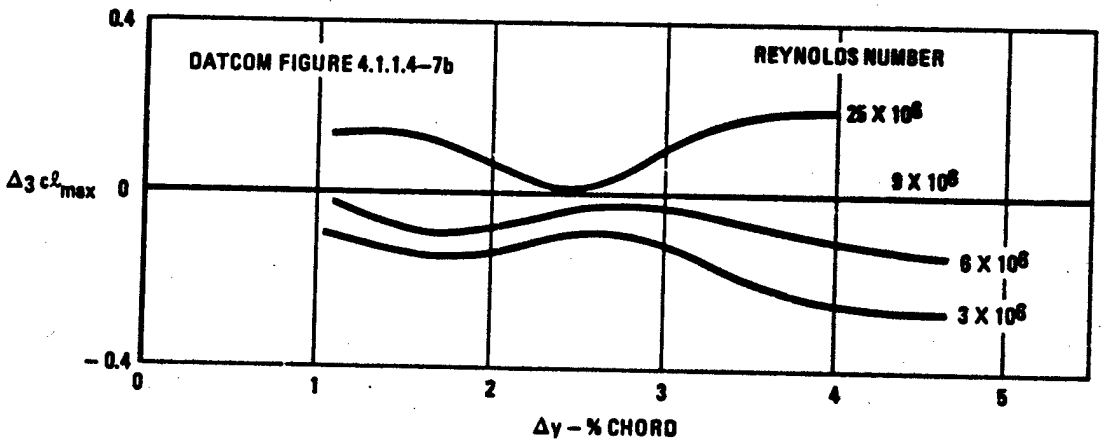

FIGURE B–6 EFFECT OF REYNOLDS NUMBER ON SECTION MAXIMUM LIFT

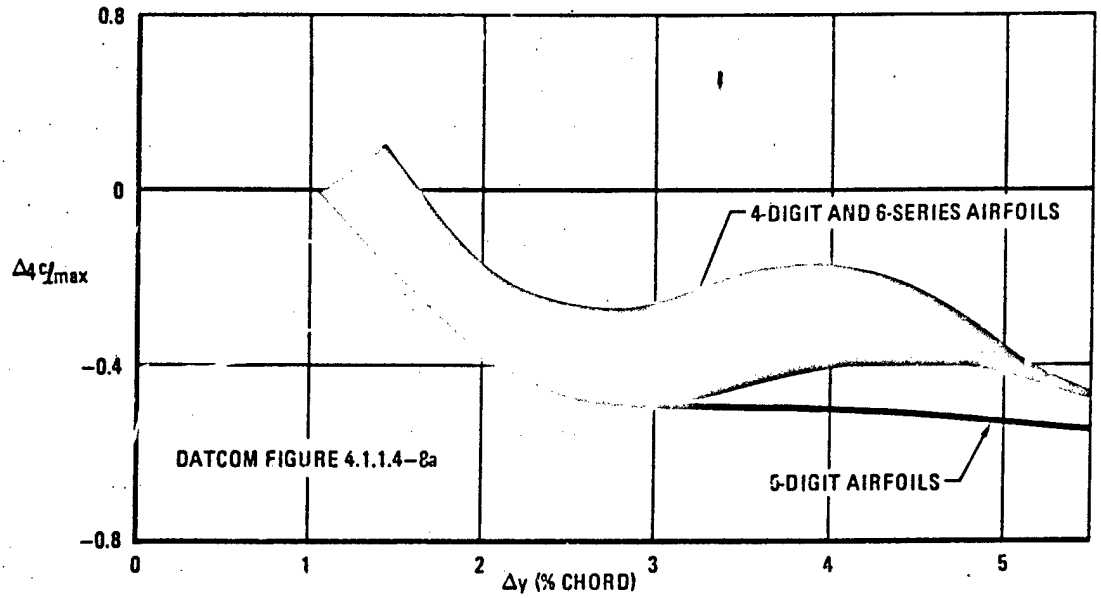

FIGURE B–7 EFFECT OF NACA STANDARD ROUGHNESS ON SECTION MAXIMUM LIFT

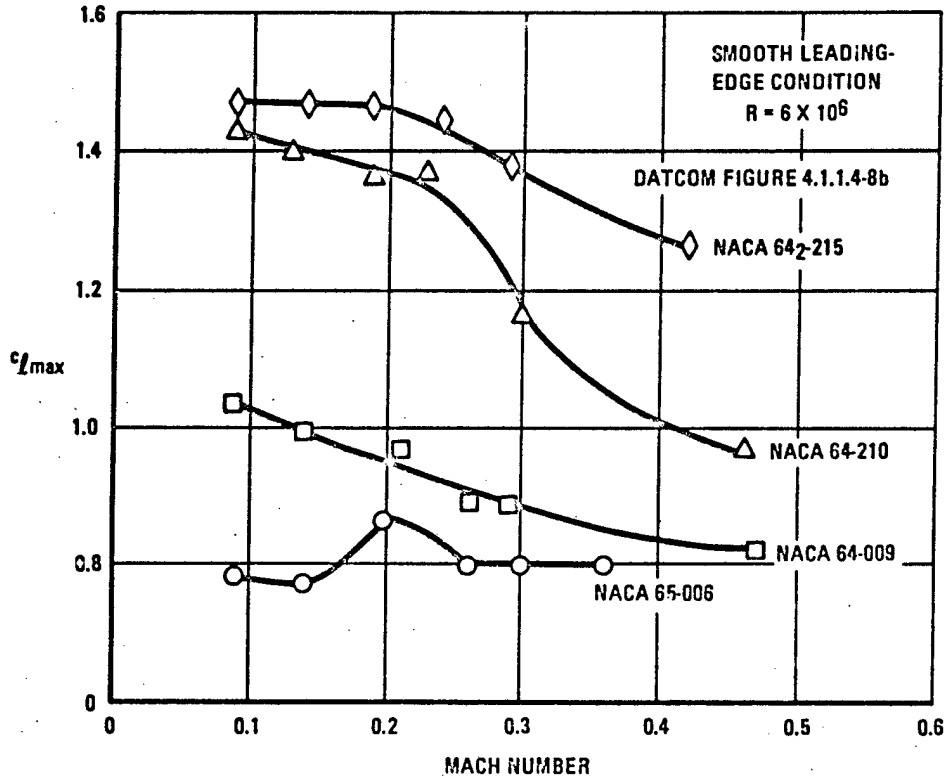

FIGURE B–8 TYPICAL VARIATION OF SECTION MAXIMUM LIFT WITH FREE-STREAM MACH NUMBER

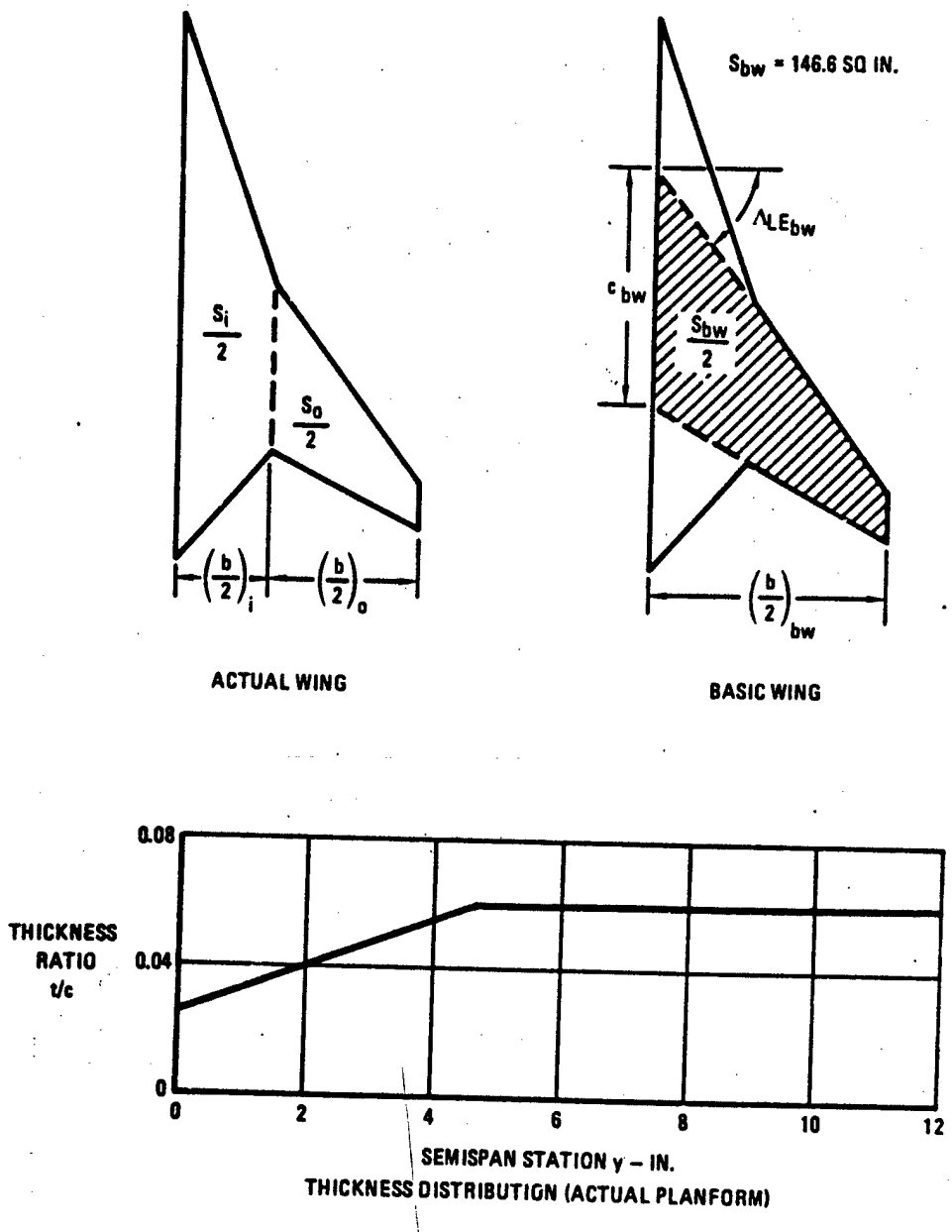

FIGURE B–9 GRAPHICAL SOLUTION FOR $(t/c)_{effective}$

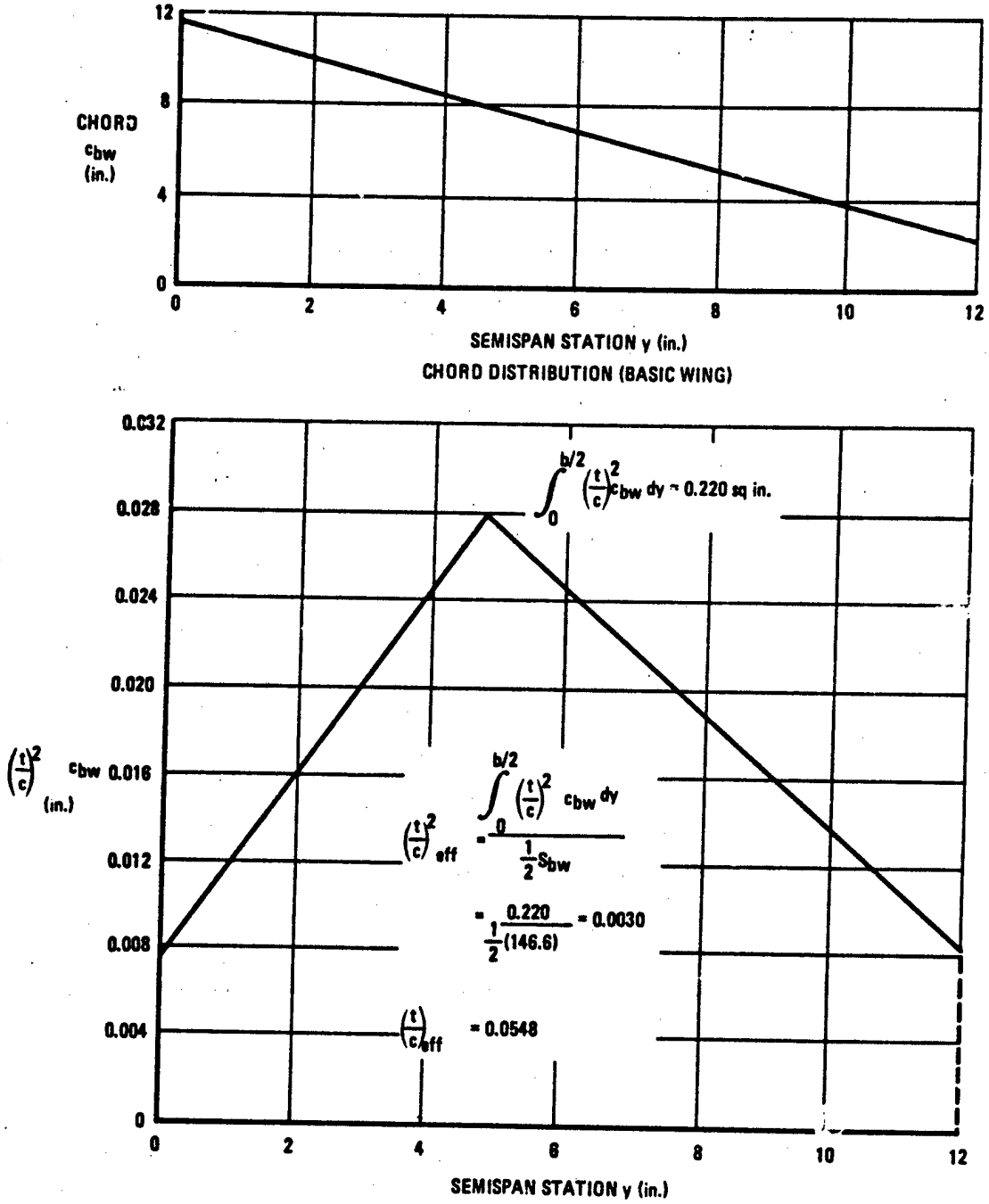

FIGURE B–9 GRAPHICAL SOLUTION FOR (t/c) EFFECTIVE (CONCLUDED)

B.4 AIRFOIL SECTION DESIGNATIONS

This section has been included to acquaint the user with the section geometric definitions, and the NACA designation scheme (reprinted from Datcom Section 2.2.1). The airfoil section module has been written to conform as closely to these designations as possible. Exceptions to the NACA designation scheme are described in Section 3.5.

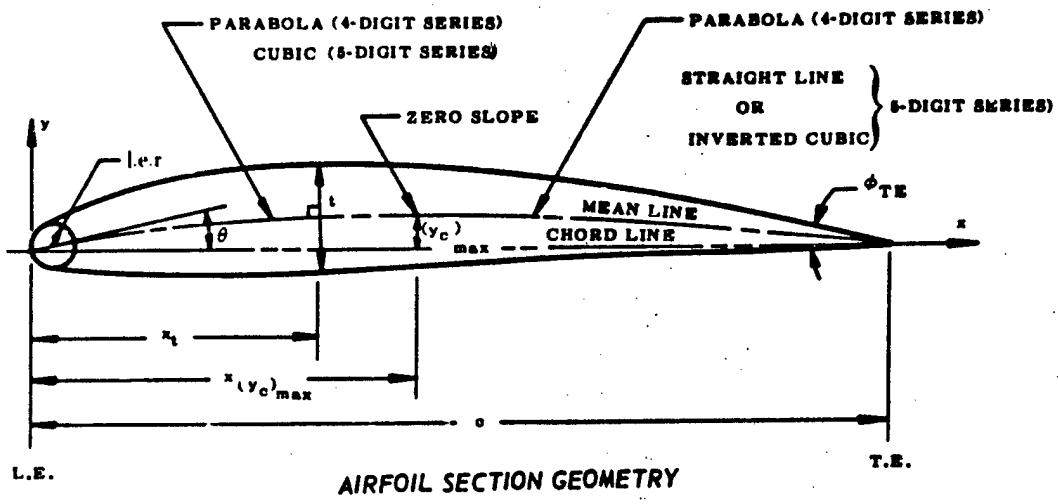

AIRFOIL SECTION GEOMETRY

BASIC SYMMETRIC AIRFOIL

c = chord of airfoil section

x = distance along chord measured from l.e.

y = ordinate at some value of x (measured normal to and from the chord line for symmetric airfoils, measured normal to and from the mean line for cambered airfoils)

y(x) = thickness distribution of airfoil

t = $2y_{max}$ = maximum thickness of airfoil

x_t = position of maximum thickness

l.e.r. = leading-edge radius

ϕ_{TE} = trailing-edge angle (included angle between the tangents to the upper and lower surfaces at the trailing edge)

CAMBER MEAN LINE

$(y_c)_{max}$ = maximum ordinate of mean line

$y_c(x)$ = shape of mean line

$x_{(y_c)_{max}}$ = position of maximum camber

θ = slope of l.e.r. through l.e. equals the slope of the mean line at the l.e.

c_ℓ = section lift coefficient

c_{ℓ_i} = design section lift coefficient

AIRFOIL SECTION DESIGNATION

"CLARK Y" AIRFOIL (NOT PROGRAMMED IN DIGITAL DATCOM)

x_t = 80% CHORD FOR ANY THICKNESS

NACA 4-DIGIT SERIES AIRFOILS

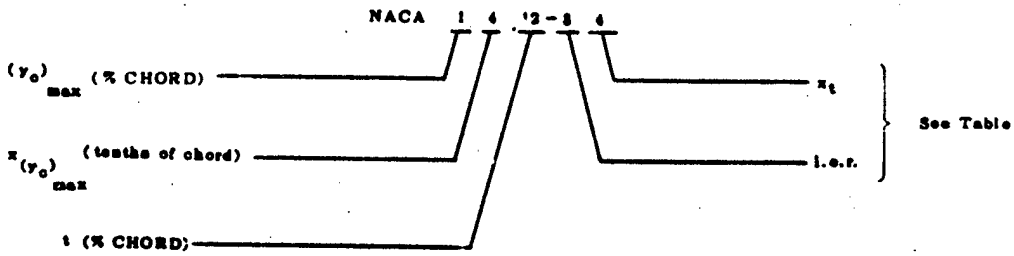

"Dash" numbers (numbers following a dash placed after the standard notation) are expressed only when l.e.r. and/or x_t are different from normal.

FIRST DASH NO.	l.e.r.	SECOND DASH NO.	x_t (% CHORD)
0	Sharp	2	20
3	½ Normal	3	30 (Normal)
6	Normal	4	40
9	3 × Normal	5	50

GERMAN NOTATION OF NACA 4-DIGIT AND 8-DIGIT SERIES AIRFOILS

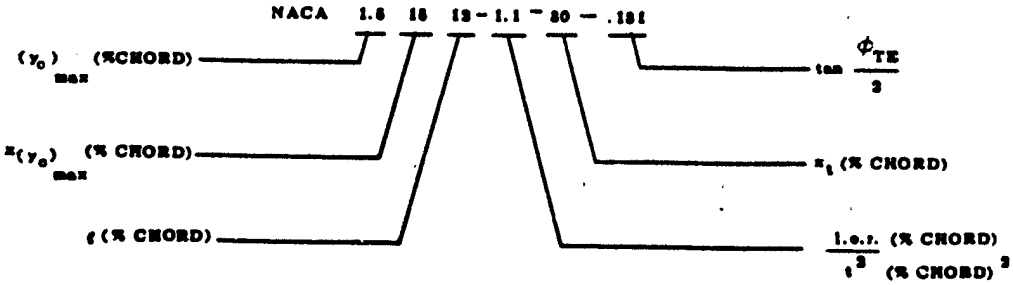

NACA 5-DIGIT SERIES AIRFOIL

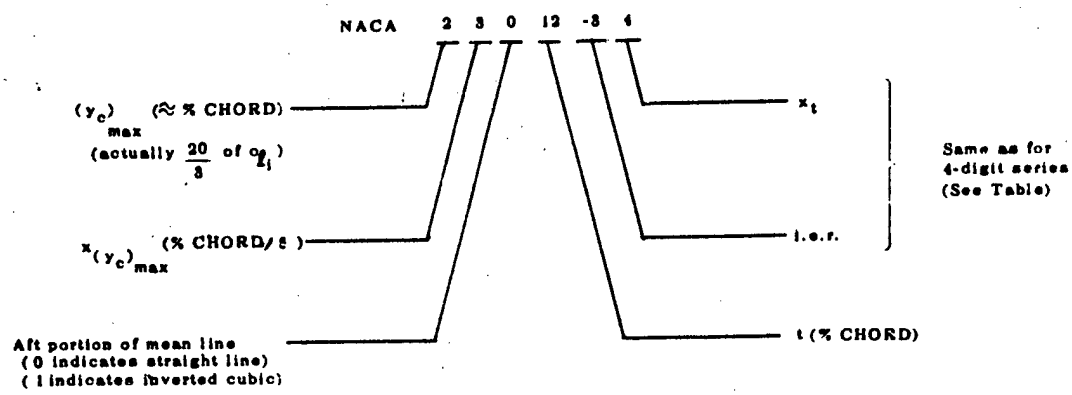

NACA 1- SERIES AIRFOILS

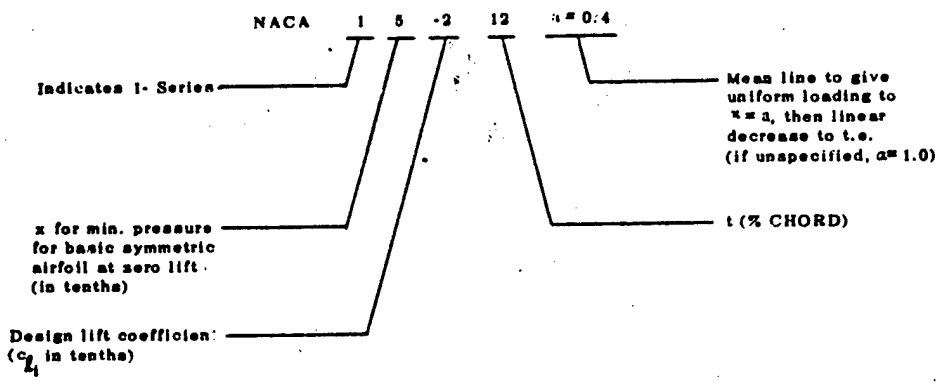

NACA 6- SERIES AIRFOILS

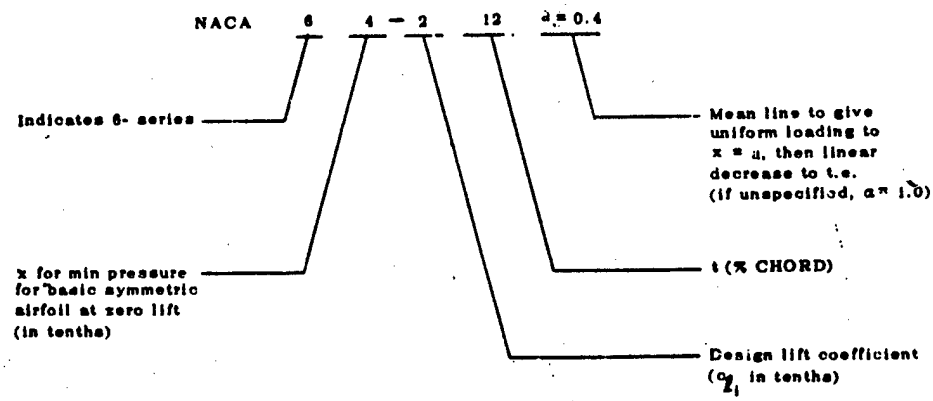

NACA 64 . 8 - 212 $a = 0.4$

as before — 64

as before — $a = 0.4$

c_l range for low drag (tenths above and below c_{l_i})

NACA 64_3 212 $a = 0.4$

as before — 64_3

as before — $a = 0.4$

c_l range for low drag with improved thickness distribution (tenths above and below c_{l_i})

To increase or decrease the airfoil thickness

(NOT PROGRAMMED IN DIGITAL DATCOM)

NACA 64 (212) - 214 $a = 0.4$

as before — 64

original c_{l_i} and t — (212)

new c_{l_i} and t (linearly increased ordinates) — 214

as before — $a = 0.4$

NACA 64 (312) - 214 $a = 0.4$

as before — 64

original c_{l_i} and t — (312)

new c_{l_i} and t (linearly increased ordinates) — 214

as before — $a = 0.4$

NACA 64_3 A 212

as before — 64_3

Indicates modified thickness distribution and type of mean line. Sections designated by Letter A are substantially straight on both surfaces from about .8c to t.e. Pressures at the nose are same as for the 64_3 -212 airfoil. — A

as before — 212

NACA 7- SERIES AIRFOILS (NOT PROGRAMMED IN DIGITAL DATCOM)

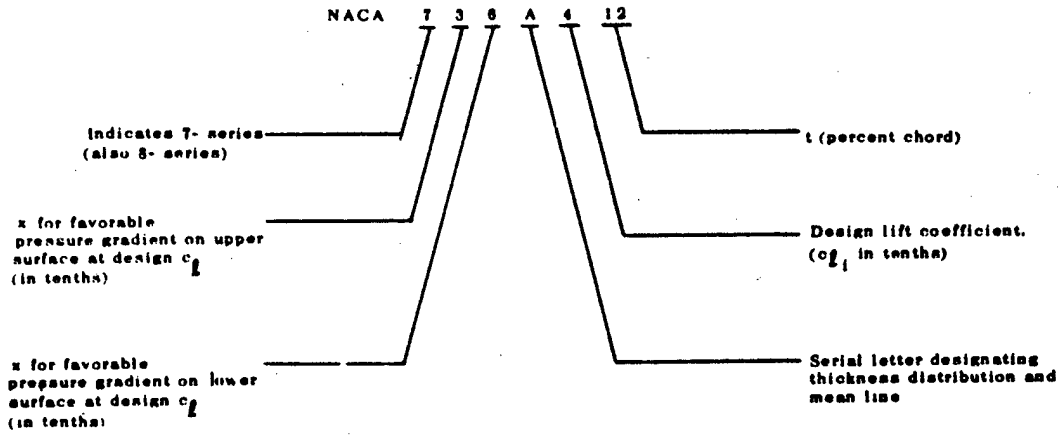

SUPERSONIC AIRFOILS

(AS PROGRAMMED IN DIGITAL DATCOM)

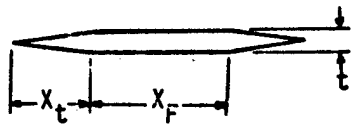

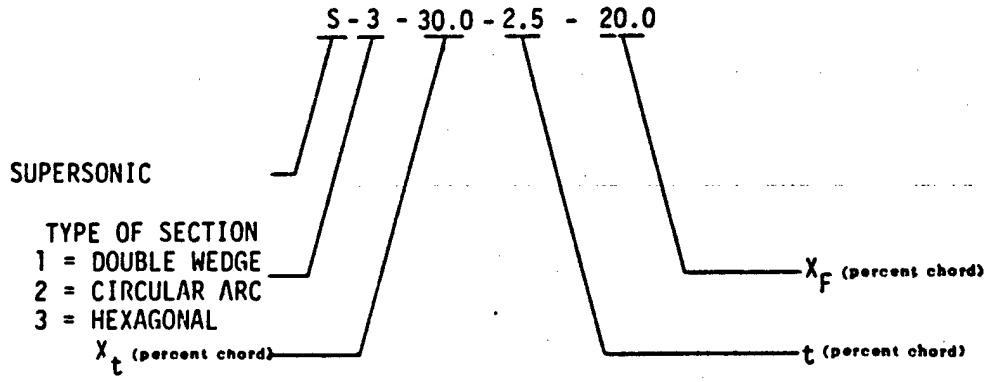

APPENDIX C

STORAGE LOCATION OF VARIABLES IN COMMON

Pertinent related variables are stored in data blocks. These variables may be obtained as output by utilizing the "DUMP" option discussed in Section 3.5. Location of variables stored in each data block are defined in this Appendix. The index that follows describes the types of variables stored in each data block, program common block, and page numbers for a detailed definition of the contents. The data block names refer to the names output from the program when the DUMP option is used.

All page, section, equation and figure references refer to the USAF Stability and Control Datcom, revised April 1976. The column titled "Overlay" defines the program overlay where the particular variable is calculated and set in the data block. The common blocks and overlay structure are discussed in Volume II.

C.1 INPUT AND COMPUTATIONAL DATA BLOCKS

DATA BLOCK	PAGE	PROGRAM COMMON BLOCK	DESCRIPTION OF VARIABLES STORED IN ARRAY
A	162	WINGD	Wing planform geometric parameters
AHT	166	HTDATA	Horizontal tail planform geometric parameters
AVF	170	VTDATA	Ventral fin geometric parameters
AVT	174	VTDATA	Vertical tail geometric parameters
B	178	WINGD	Flight condition parameters and subsonic wing lift variables
BD	179	BDATA	Subsonic body parameters
BDIN	182	BØDYIN	Body inputs via namelist BØDY
BHT	183	HTDATA	Flight condition parameters and subsonic horizontal tail lift variables
C	184	WHAERØ	Subsonic wing pitching moment parameters
CHT	187	WHAERØ	Subsonic horizontal tail pitching moment parameters
D	190	WHAERØ	Subsonic wing drag variables
DHT	192	WHAERØ	Subsonic horizontal tail drag variables
DVF	194	WHAERØ	Subsonic ventral fin drag parameters
DVT	196	WHAERØ	Subsonic vertical tail drag parameters
DWA	198	SUPDW	Supersonic downwash variables

DATA BLOCK	PAGE	PROGRAM COMMON BLOCK	DESCRIPTION OF VARIABLES STORED IN ARRAY
DYN	199	PØWR	Dynamic derivative variables for all speed regimes and configurations
DYNH	203	BDATA	Dynamic derivative variables for all speed regimes and horizontal tail and horizontal tail body configurations
F	207	FLAPIN	Symmetrical and jet flap inputs via namelist SYMFLP Asymmetrical flap inputs via namelist ASYFLP Transverse jet inputs via namelist TRNJET Hypersonic flap inputs via namelist HYPEFF
FACT	212	WHWB	Subsonic wing and horizontal tail parameters
FCM	213	SUPWH	Subsonic high-lift and control pitching moment variables
FHG	214	SUPDW	Subsonic high-lift and control hinge moment variables
FLA	216	PØWR	Subsonic high-lift and control asymmetrical deflection variables
FLC	217	FLGTCD	Flight condition variables input via namelist FLTCØN
FLP	218	PØWR	Subsonic high-lift and control lift coefficient variables
GR	220	SUPWH	Ground effect variables
HB	222	WHWB	Subsonic horizontal tail-body variables
HTIN	223	HTI	Horizontal tail inputs via namelists HTPLNF and HTSCHR
HYP	225	BDATA	Hypersonic control effectiveness parameters
JET	226	SUPDW	Transverse-jet control parameters
LB	227	SUPDW	Low aspect ratio wing and wing-body parameters
LBIN	230	PØWER	Low aspect ratio wing-body inputs via namelist LARWB
ØPTI	231	ØPTIØN	Case reference dimensional input via namelist ØPTINS
PW	232	PØWR	Power effect variables, propeller power Power effect variables, jet power
PWIN	238	PØWER	Power effect variables input via namelists PRØPWR or JETPWR
SBD	239	SUPBØD	Supersonic body variables
SECD	242	LEVEL2	Transonic second level method parameters
SHB	244	SUPWB	Supersonic horizontal tail-body variables

DATA BLOCK	PAGE	PROGRAM COMMON BLOCK	DESCRIPTION OF VARIABLES STORED IN ARRAY
SLA	245	SBETA	Supersonic sideslip variables, all configurations
SLAH	246	SBETA	Supersonic sideslip variables, horizontal tail and horizontal tail-body configurations
SLG	247	SUPWH	Supersonic wing variables
SPR	250	PØWR	Supersonic high-lift and control variables
STB	252	SBETA	Subsonic sideslip variables, all configurations
STBH	255	SBETA	Subsonic sideslip variables, horizontal tail and horizontal tail-body configurations
STG	258	SUPWH	Supersonic horizontal tail variables
STP	261	WBHCAL	Supersonic wing body horizontal tail variables
SWB	262	SUPWB	Supesonic wing-body variables
SYNA	263	SYNTSS	Synthesis dimensions input via namelist SYNTHS
TCD	264	SUPDW	Supersonic spanwise loading coefficient parameters and high-lift and control drag variables
TRA	265	SBETA	Transonic longitudinal and lateral directional stability variables
TRAH	268	SBETA	Transonic longitudinal and lateral directional stability variables for horizontal tail and horizontal tail body configurations
TRM	271	PØWR	Subsonic trim variables for control device on wing or tail
TRM2	272	PØWR	Subsonic trim variables for an all movable horizontal stabilizer
TRN	273	PØWR	Transonic high-lift and control variables
TVT	274	VTI	Twin vertical panel inputs via namelist TVTPAN
VFIN	275	VTI	Ventral fin inputs via namelist VFPLNF and VFSCHR
VTIN	277	VTI	Vertical tail inputs via namelists VTPLNF and VTSCHR
WB	279	WHWB	Subsonic wing-body variables
WBT	280	WBHCAL	Subsonic wing-body-horizontal tail parameters
WGIN	281	WINGI	Wing inputs via namelists WGPLNF and WGSCHR

C.2 OUTPUT DATA BLOCKS

The output data blocks contain the output results from the program. There exists an output array for each configuration summarized as follows:

OUTPUT DATA BLOCK	PROGRAM COMMON BLOCK	CONFIGURATIONS/VALUES
BØDY	IBØDY	Body Alone
WING	IWING	Wing Alone
HT	IHT	Horizontal Tail Alone
VT	IVT	Vertical Tail Alone
VF	IVF	Ventral Fin Alone
BW	IBW	Body-Wing
BH	IBH	Body-Horizontal Tail
BV	IBV	Body-Vertical Tail-Ventral Fin*
BWH	IBWH	Body-Wing-Horizontal Tail
BWV	IBWV	Body-Wing-Vertical Tail-Ventral Fin*
BWHV	IBWHV	Body-Wing-Horizontal Tail-Vertical Tail-Ventral Fin*
PØWR	IPØWER	Power Increments
DWSH	IDWASH	Downwash values

*Configuration can include (1) Vertical Tail Only, (2) Ventral Fin Only, or (3) both, depending upon the configuration.

The arrangement of the output arrays is as follows:

OUTPUT DATA BLOCKS	ARRAY ELEMENTS	CONTAINS
BØDY, WING, HT, VT, VF, BW, BH, BV, BWH, BWV, BWHV	1-20	C_D vs α
	21-40	C_L vs α
	41-60	C_m vs α
	61-80	C_N vs α
	81-100	C_A vs α
	101-120	C_{L_α} vs α
	121-140	C_{m_α} vs α
	141-160	C_{Y_β} vs α
	161-180	C_{n_β} vs α
	181-200	C_{ℓ_β} vs α
	201-220	C_{L_q} vs α
	221-240	C_{m_q} vs α
	241-260	$C_{L_{\dot\alpha}}$ vs α
	261-280	$C_{m_{\dot\alpha}}$ vs α
	281-300	C_{ℓ_p} vs α
	301-320	C_{Y_p} vs α
	321-340	C_{n_p} vs α
	341-360	C_{n_r} vs α
	361-380	C_{ℓ_r} vs α
PØWR (Power Increments)	1-20	ΔC_D vs α
	21-40	ΔC_L vs α
	41-60	ΔC_m vs α
	61-80	ΔC_N vs α
	81-100	ΔC_A vs α
	101-120	ΔC_{L_α} vs α
	121-140	ΔC_{m_α} vs α
	141-160	ΔC_{Y_β} vs α

OUTPUT DATA BLOCKS	ARRAY ELEMENTS	CONTAINS
	161-180	ΔC_{n_β} vs α
	181-200	ΔC_{ℓ_β} vs α
DWSH (Downwash Data)	1-20	q_H/q_∞ vs α
	21-40	ϵ vs α
	41-60	$\partial\epsilon/\partial\alpha$ vs α

C.3 FLAP AND TRIM OUTPUT DATA BLOCKS

When running flap or trim cases, the output results are stored in output data blocks which can be seen by using the "DUMP" control card. To conserve program core, these results are stored in the dynamic derivative portion of the configuration data blocks. The arrangement of these output arrays is as follows:

SYMMETRICAL FLAPS

OUTPUT DATA BLOCKS	ARRAY ELEMENTS	CONTAINS
BØDY	1-200	ΔC_{D_I} vs α,δ
WING	1-10	ΔC_L vs δ
WING	11-20	ΔC_m vs δ
WING	21-30	$\Delta C_{L_{max}}$ vs δ
WING	31-40	$\Delta C_{D_{min}}$ vs δ
WING	41-50	(ΔC_{L_α}) vs δ
WING	51-60	C_{h_α} vs δ
WING	61-70	C_{h_δ} vs δ

CONTROL TABS

OUTPUT DATA BLOCKS	ARRAY ELEMENTS	CONTAINS
BW	1-10	C_{F_C}, F_C vs δ
BH	1-10	C_{h_C} vs δ
BV	1-10	C_{h_C} vs δ
BWH	1-10	$\Delta C_{h_{CG}}$ vs δ
BWHV	1-10	T_t vs δ

ASYMMETRICAL FLAPS

OUTPUT DATA BLOCKS	ARRAY ELEMENTS	CONTAINS
BØDY	1-200	C_n vs α, δ
WING	1-200	C_ℓ vs α, δ
HT	1-10	$\delta_L - \delta_R$
HT	11-20	C_ℓ vs δ
HT	21-31	C_n vs δ

TRIM WITH CONTROL DEVICES

OUTPUT DATA BLOCKS	ARRAY ELEMENTS	CONTAINS
HT	1-20	$C_{L_{untrimmed}}$ vs δ
HT	21-40	$C_{D_{untrimmed}}$ vs δ
HT	41-60	$C_{m_{untrimmed}}$ vs δ
VT	1-20	δ_{Trim} vs δ
VT	21-40	$\Delta C_{L_{Trim}}$ vs δ
VT	41-60	$\Delta C_{L_{max_{Trim}}}$ vs δ
VT	61-80	$\Delta C_{D_{I_{Trim}}}$ vs δ
VT	81-100	$\Delta C_{D_{Trim}}$ vs δ
VT	101-120	$C_{h_{\alpha Trim}}$ vs δ
VT	121-140	$C_{h_{\delta Trim}}$ vs δ

ALL MOVABLE HORIZONTAL TAIL TRIM

OUTPUT DATA BLOCKS		ARRAY ELEMENTS	CONTAINS
HT	Tail Alone	1-20	$HM_{untrimmed}$ vs α
HT	Tail Alone	21-40	δ_{Trim} vs α
HT	Tail Alone	41-60	$C_{D_{Trim}}$ vs α
HT	Tail Alone	61-80	$C_{L_{Trim}}$ vs α
HT	Tail Alone	81-100	$C_{m_{Trim}}$ vs α
HT	Tail Alone	101-120	HM_{Trim} vs α
VT	Full Configuration	1-20	$C_{D_{WBT_{Trim}}}$ vs α
VT	Full Configuration	21-40	$C_{L_{WBT_{Trim}}}$ vs α

WING PLANFORM GEOMETRIC PROPERTIES

VARIABLE DEFINITION OF DATA BLOCK "A"

LOCATION	VARIABLE NAME	ENGINEERING SYMBOL	DATCOM REFERENCE	COMMENTS/DEFINITIONS	OVERLAY
1	ARIPE	S_I*		Exposed inboard wing area	2, 18
2	ARØPE	$S_Ø$*		Exposed outboard wing area	2, 18
3	ARØVAL	S_r*		Exposed wing area	2, 18
4	ARREF	S_r		Theoretical wing area	2, 18
5	ASPIPE	A_I*		Exposed inboard wing aspect ratio	2, 18
6	ASPØPE	$A_Ø$*		Exposed outboard wing aspect ratio	2, 18
7	ASPØVL	A_w*		Exposed wing aspect ratio	2, 18
8		$(\Lambda_{c/x})_w$		Wing chord station where Λ=0	2, 21
9		ℓ_w		Wing maximum overall length	2, 21
10	CHRDRE	C_r*		Exposed wing root chord	2, 18
11	GAMMA	γ		$\tan^{-1}(h_H/\ell_2)$	2, 21
12		h_H	4.4.1	4.4.1 - sketch (a)	2, 21
13	Print FLAG - (DNPWBT)				
14	Canard (logical)				
15	MACIPE	$\bar{c}_I$*		Exposed wing inboard MAC	2, 18
16	MACØE	$\bar{c}_w$*		Exposed wing MAC	2, 18
17	MACØPE	$\bar{c}_Ø$*		Exposed wing outboard MAC	2, 18
18	NDTCP	σ*		Effective exposed wing aspect ratio	2, 18
19	SPTIPE	r_b*		A(23)/A(21)	2, 18
20		ℓ_{EFF}	4.4.1	4.4.1 - sketch (a)	9
21	SSPNBØ	b /2		Semi-span of inboard thecretical panel	2, 18
22		ℓ_3		p. 4.4.1-5	2, 21
23	SSPNEX	b */2		Semi-span of inboard exposed panel	2, 18
24		ℓ_2	4.4.1	4.4.1 - sketch (a)	2, 21
25	TRATIP	λ_I		Theoretical wing inboard taper ratio	2, 18
26	TRTIPE	λ_I*		Exposed wing inboard taper ratio	2, 18
27	TRTØE	λ_w*		Exposed wing taper ratio	2, 18
28	TRTØPE	$\lambda_Ø$*		Exposed wing outboard taper	2, 18

VARIABLE DEFINITION OF DATA BLOCK "A"

LOCATION	VARIABLE NAME	ENGINEERING SYMBOL	DATCOM REFERENCE	COMMENTS/DEFINITIONS	OVERLAY
29	LENGTH	ℓ^*		Exposed wing maximum overall length	2, 18
30	XCNTEX	$\bar{x}^*$		X distance from wing apex to 50% wing MAC	2, 18
31	YCNTEX	$\bar{y}^*$		Exposed wing Y distance from body to MAC of total wing	2, 18
32	YCNTIE	$\bar{y}_I^*$		Exposed inboard panel Y distance from body to inboard MAC	2, 18
33	YCNTØE	$\bar{y}_\emptyset^*$		Exposed outboard panel Y-distance from body to outboard MAC	2, 18
34	SAE000	Λ_o^*		Exposed wing LE sweep angle, degrees; effective LE sweep angle for non-straight wings	2, 18
35		Λ_0^*		Angle in radians	2, 18
36		SIN Λ_0^*		Trignometric sine of Λ_0^*	2, 18
37		COS Λ_0^*		Trignometric cosine of Λ_0^*	2, 18
38		TAN Λ_0^*		Trignometric tangent of Λ_0^*	2, 18
39		$(\Lambda_0^*)_T$		Test value used in Sub. ANGLES	2, 18
40-45	SAE025	$\Lambda^*_{.25}$		Exposed wing quarter chord sweep	2, 18
46-51	SAE050	$\Lambda^*_{.50}$		Exposed wing half chord sweep	2, 18
52-57	SAE100	$\Lambda^*_{1.00}$		Exposed wing T.E. sweep	2, 18
58-63	SAI000	$(\Lambda_0)_I$		Inboard panel LE sweep	2, 18
64-69	SAI025	$(\Lambda_{.25})_I$		Inboard panel quarter chord sweep	2, 18
70-75	SAI050	$(\Lambda_{.50})_I$		Inboard panel half chord sweep	2, 18
76-81	SAI100	$(\Lambda_{1.00})_I$		Inboard panel T.E. sweep	2, 18
82-87	SAØ000	$(\Lambda_0)_\emptyset$		Outboard panel L.E. sweep	2, 18
88-93	SAØ025	$(\Lambda_{.25})_\emptyset$		Outboard panel quarter chord sweep	2, 18
94-99	SAØ050	$(\Lambda_{.50})_\emptyset$		Outboard panel half chord sweep	2, 18
100-105	SAØ100	$(\Lambda_{1.00})_\emptyset$		Outboard panel T.E. sweep	2, 18
106-111	SAVSI	$(\Lambda_m)_I$		User specified inboard panel sweep	2, 18
112-117	SAVSØ	$(\Lambda_m)_\emptyset$		User specified outboard panel sweep	2, 18

VARIABLE DEFINITION OF DATA BLOCK "A"

LOCATION	VARIABLE NAME	ENGINEERING SYMBOL	DATCOM REFERENCE	COMMENTS/DEFINITIONS	OVERLAY
118		λ_r		Overall taper ratio	2, 18
119	ARIP	S_I		Area of inboard panel	2, 18
120		A_w		Overall aspect ratio	2, 18
121	CBARI	$\bar{c}_I$		Inboard panel theoretical MAC	2, 18
122	CBARR	$\bar{c}_r$		Wing mean aerodynamic chord	2, 18
123	C1	C_1	4.1.3.4	Aspect ratio classification	2, 18
124		$(1+C_1)\times \cos \Lambda_{LE}$		Aspect ratio classification	2
125		A(128)/A(124)		Aspect ratio classification	2
126		$(\alpha_o)_{m=0}$		Inviscid zero lift angle of attack	0
127		$(\alpha_{C_{L_{max}}})_{M=0}$		Inviscid max lift angle of attack	0
128				AR classification factor	2
129	RNFS	R_f		Reynolds number of wing	0
130		$\bar{Y}_I$		Y distance from vehicle center-line to MAC of inboard panel	2, 18
131	CLALPA	C_{ℓ_α}		User defined C_{ℓ_α}	0
132	CLMAX	$C_{\ell_{max}}$		User defined $C_{\ell_{max}}$	0
133		$\bar{Y}_\emptyset$		Y distance from vehicle center line to MAC of outboard panel	2, 18
134	ALPHAO	α_0		Zero lift angle of attack	15
135	DAØØT	$\Delta\alpha_0/\theta$		Change in α_0 due to wing twist	15
136		$\bar{Y}_R$		Y distance from vehicle center line to total wing MAC	2, 18
137	AOMØAO	$(\alpha_{0_M})/\alpha_0$	4.1.3.1	Figure 4.1.3.1-5	15
138-143	SWAFP	Λ_{AF}			1,2,15
144		$\Delta\alpha C_{\ell_{max}}$	4.1.3.4	Figure 4.1.3.4-21b	15
145		$C_{L_{max}}/C_{\ell_{max}}$	4.1.3.4	Figure 4.1.3.4-21a	15
146		$C_{\ell_{max}} \times$ (A(145))			15

VARIABLE DEFINITION OF DATA BLOCK "A"

LOCATION	VARIABLE NAME	ENGINEERING SYMBOL	DATCOM REFERENCE	COMMENTS/DEFINITIONS	OVERLAY
147-152	ALCLMX	$(\alpha_e)_{C_{L_{max}}}$		$(\alpha_{C_{L_{max}}}-\alpha_0)$, degrees	15
153-158	AEJ	$(\alpha_e)_J$		$(\alpha_J-\alpha_0)$, degrees	15
159		C_2	4.1.3.4	Figure 4.1.3.4-24b	15
160		$(1+C_2)\times$ $A\tan\Lambda_{LE}$	4.1.3.4		15,24
161		$\bar{x}_R$		X distance from wing apex to wing MAC quarter chord	2, 18
162	CNB	n_B		b_b^*/b^*	2, 18
163		A_I		Inboard theoretical panel aspect ratio	2, 18
164		$\Delta Y'$		Geometric parameters for fictitious outboard panel of straight tapered wing; used to calculate wing pitching moments	2, 18
165		$(b_0^*/2)'$			2, 18
166		C_b'			2, 18
167		$(S_\emptyset^*)'$			2, 18
168		$(A_\emptyset^*)'$			2, 18
169		$(\lambda_\emptyset^*)'$			2, 18
170		n			31
171		$(C_{L_\alpha})_I$		Inboard panel lift curve slope	15
172		$(C_{L_\alpha})_\emptyset$		Outboard panel lift curve slope	15
173		ΔX_{CG}			2, 27
174	TØVC	$(t/c)_I$		User defined thickness ratio of inboard panel, or total wing	2, 18
175-180	SATCM	$(\Lambda)_{t/c\ max}$		Wing sweep at the maximum thickness chord station	2, 18
181-186	SATCMØ	$[(\Lambda)_{t/c\ max}]_\emptyset$		Outboard panel sweep of the maximum thickness chord station	2, 18
187-192	SATCMI	$[(\Lambda)_{t/c\ max}]_I$		Inboard panel sweep of the maximum thickness chord station	2, 18
193		ℓ_H		$X_H-X_W-\bar{c}_{rW}\cos(\alpha_{I_W})$	2, 21
194		L_H		$A(193)+(\bar{X}_R)_H\cos(\alpha_{iH})$	2, 21
195		X_R		X distance from wing apex to LE of total wing MAC	2, 18

HORIZONTAL TAIL PLANFORM GEOMETRIC PROPERTIES

VARIABLE DEFINITION OF DATA BLOCK "AHT"

LOCATION	VARIABLE NAME	ENGINEERING SYMBOL	DATCOM REFERENCE	COMMENTS/DEFINITIONS	OVERLAY
1	ARIPE	S_I*		Exposed inboard H.T. area	2, 18
2	ARØPE	$S_Ø$*		Exposed outboard H.T. area	2, 18
3	ARØVAL	S_r*		Exposed H.T. area	2, 18
4	ARREF	S_r		Theoretical H.T. area	2, 18
5	ASPIPE	A_I*		Exposed inboard H.T. aspect ratio	2, 18
6	ASPØPE	$A_Ø$*		Exposed outboard H.T. aspect ratio	2, 18
7	ASPØVL	A_w*		Exposed H.T. aspect ratio	2, 18
8-9		UNUSED			
10	CHRDRE	C_r*		Exposed H.T. root chord	2, 18
11-14		UNUSED			
15	MACIPE	$\bar{c}_I$*		Exposed H.T. inboard MAC	2, 18
16	MACØE	$\bar{c}_w$*		Exposed H.T. MAC	2, 18
17	MACØPE	$\bar{c}_Ø$*		Exposed H.T. outboard MAC	2, 18
18	NDTCP	σ*		Effective exposed H.T. aspect ratio	2, 18
19	SPTIPE	r_b*		AHT(23)/AHT(21)	2, 18
20		UNUSED			
21	SSPNBØ	$b_b/2$		Semi-span of inboard theoretical panel	2, 18
22		UNUSED			
23	SSPNEX	b_b*/2		Semi-span of inboard exposed panel	2, 18
24		UNUSED			
25	TRATIP	λ_I		Theoretical H.T. inboard taper ratio	2, 18
26	TRTIPE	λ_I*		Exposed H.T. inboard taper ratio	2, 18
27	TRTØE	λ_w*		Exposed H.T. taper ratio	2, 18
28	TRTØPE	$\lambda_Ø$*		Exposed H.T. outboard taper ratio	2, 18
29	LENGTH	ℓ*		Exposed H.T. maximum overall length	2, 18
30	XCNTEX	$\bar{X}$*		X distance from H.T. apex to 50% wing MAC	2, 18

VARIABLE DEFINITION OF DATA BLOCK "AHT"

LOCATION	VARIABLE NAME	ENGINEERING SYMBOL	DATCOM REFERENCE	COMMENTS/DEFINITIONS	OVERLAY
31	YCNTEX	$\overline{Y}_w{}^*$		Exposed H.T. Y distance from body to MAC of total H.T.	2, 18
32	YCNTIE	$\overline{Y}_I{}^*$		Exposed inboard panel Y distance from body to inboard MAC	2, 18
33	YCNTØE	$\overline{Y}_Ø{}^*$		Exposed outboard panel Y distance from body to outboard MAC	2, 18
34	SAE000	$\Lambda_0{}^*$		Exposed H.T. LE sweep angle, degrees; effective LE sweep angle for non-straight wings	2, 18
35		$\Lambda_0{}^*$		Angle in radians	2, 18
36		SIN $\Lambda_0{}^*$		Trignometric sine of $\Lambda_0{}^*$	2, 18
37		COS $\Lambda_0{}^*$		Trignometric cosine of $\Lambda_0{}^*$	2, 18
38		TAN $\Lambda_0{}^*$		Trignometric tangent of $\Lambda_0{}^*$	2, 18
39		$(\Lambda_0{}^*)_T$		Test value used in Sub. ANGLES	2, 18
40-45	SAE025	$\Lambda^*_{.25}$		Exposed H.T. quarter chord sweep	2, 18
46-51	SAE050	$\Lambda^*_{.50}$		Exposed h.T. half chord sweep	2, 18
52-57	SAE100	$\Lambda^*_{1.00}$		Exposed H.T. TE sweep	2, 18
58-63	SAI000	$(\Lambda_0)_I$		Inboard panel LE sweep	2, 18
64-69	SAI025	$(\Lambda_{.25})_I$		Inboard panel quarter chord sweep	2, 18
70-75	SAI050	$(\Lambda_{.50})_I$		Inboard panel half chord sweep	2, 18
76-81	SAI100	$(\Lambda_{1.00})_I$		Inboard panel TE sweep	2, 18
82-87	SAØ000	$(\Lambda_0)_Ø$		Outboard panel LE sweep	2, 18
88-93	SAØ025	$(\Lambda_{.25})_Ø$		Outboard panel quarter chord sweep	2, 18
94-99	SAØ050	$(\Lambda_{.50})_Ø$		Outboard panel half chord sweep	2, 18
100-105	SAØ100	$(\Lambda_{1.00})_Ø$		Outboard panel TE sweep	2, 18
106-111	SAVSI	$(\Lambda_m)_I$		User specified inboard panel sweep	2, 18
112-117	SAVSØ	$(\Lambda_m)_Ø$		User specified outboard panel sweep	2, 18
118		λ_r		Overall taper ratio	2, 18
119	ARIP	S_I		Area of exposed inboard panel	2, 18
120		A_w		Overall aspect ratio	2, 18
121	CBARI	$\overline{c}_I$		Inboard panel theoretical MAC	2, 18

VARIABLE DEFINITION OF DATA BLOCK "AHT"

LOCATION	VARIABLE NAME	ENGINEERING SYMBOL	DATCOM REFERENCE	COMMENTS/DEFINITIONS	OVERLAY
122	CBARR	$\bar{c}_r$		H.T. mean aerodynamic chord	2, 18
123	CI	C_1	4.1.3.4	Aspect ratio classification	2, 18
124		$(1+C_1)\times \cos \Lambda_{LE}$		Aspect ratio classification	2
125		AHT (128)/AHT (124)		Aspect ratio classification	2
126		$(\alpha_0)_{M=0}$		Inviscid zero lift angle of attack	0
127		$(\alpha_{C_{L_{max}}})_{M=0}$		Inviscid max lift angle of attack	0
128				AR classification factor	2
129	RNFS	R_f		Reynolds number of H.T.	0
130		$\bar{Y}_I$		Y distance from vehicle center line to MAC of inboard panel	2, 18
131	CLALPA	C_{ℓ_α}		User defined C_{ℓ_α}	0
132	CLMAX	$C_{\ell_{max}}$		User defined $C_{\ell_{max}}$	0
133		$\bar{Y}_\emptyset$		Y distance from vehicle center line to MAC of outboard panel	2, 18
134	ALPHAO	α_0		Zero lift angle of attack	16
135	DAØØT	$\Delta\alpha_0/\theta$		Change in α_0 due to wing twist	16
136		$\bar{Y}_R$		Y distance from vehicle center line to total wing MAC	2, 18
137	AOMØAO	$(\alpha_{0_M})/\alpha_0$	4.1.3.1	Figure 4.1.3.1-5	16
138-143	SWAFP	Λ_{AFI}			1,2,16
144		$\Delta\alpha C_{\ell_{max}}$	4.1.3.4	Figure 4.1.3.4-21b	16
145		$C_{L_{max}}/C_{\ell_{max}}$		Figure 4.1.3.4-21a	16
146		$C_{\ell_{max}} \times$ AHT(145)			16
147-152	ALCLMX	$(\alpha_e)_{C_{L_{max}}}$		$(\alpha_{C_{L_{max}}}-\alpha_0)$, degrees	16
153-158	AEJ	$(\alpha_e)_J$		$(\alpha_J - \alpha_0)$, degrees	16
159		C_2	4.1.3.4	Figure 4.1.3.4-24b	16
160		$(1+C_2) \times \text{Atan}\Lambda_{LE}$	4.1.3.4		16

VARIABLE DEFINITION OF DATA BLOCK "AHT"

LOCATION	VARIABLE NAME	ENGINEERING SYMBOL	DATCOM REFERENCE	COMMENTS/DEFINITIONS	OVERLAY
161		$\bar{X}_R$		X distance from H.T. apex to H.T. MAC quarter chord	2, 18
162	CNB	n_B		b_b*/b*	2, 18
163		A_I		Inboard theoretical panel aspect ratio	2, 18
164		$\Delta Y'$		Geometric parameters for fic-	2, 18
165		$(b_0*/2)'$		ticious outboard panel of straight tapered H.T.; used to calculate H.T. pitching moments	2, 18
166		C_b'			2, 18
167		$(S_\emptyset*)'$			2, 18
168		$(A_\emptyset*)'$			2, 18
169		$(\lambda_\emptyset*)'$			2, 18
170		n			33
171		$(C_{L_\alpha})_I$		Inboard panel lift curve slope	16
172		$(C_{L_\alpha})_\emptyset$		Outboard panel lift curve slope	16
173		ΔX_{CG}			2, 22
174	TØVC	$(t/c)_I$		User defined thickness ratio of inboard panel, or total wing	2, 18
175-180	SATCM	$(\Lambda)_{t/c\ max}$		H.T. sweep at the maximum thickness chord station	2, 18
181-186	SATCMØ	$[(\Lambda)_{t/c\ max}]_\emptyset$		Outboard panel sweep at the maximum thickness chord station	2, 18
187-192	SATCMI	$[(\Lambda)_{t/x\ max}]_I$		Inboard panel sweep at the maximum thickness chord station	2, 18
193-194		UNUSED			
195		X_R		X distance from H.T. apex to LE of total H.T. MAC	2, 18

VENTRAL FIN PLANFORM GEOMETRIC PROPERTIES

VARIABLE DEFINITION OF DATA BLOCK "AVF"

LOCATION	VARIABLE NAME	ENGINEERING SYMBOL	DATCOM REFERENCE	COMMENTS/DEFINITIONS	OVERLAY
1	ARIPE	S_I*		Exposed inboard V.F. area	2, 18
2	ARØPE	$S_Ø$*		Exposed outboard V.F. area	2, 18
3	ARØVAL	S_r*		Exposed V.F. area	2, 18
4	ARREF	S_r		Theoretical V.F. area	2, 18
5	ASPIPE	A_I*		Exposed inboard V.F. aspect ratio	2, 18
6	ASPØPE	$A_Ø$*		Exposed outboard V.F. aspect ratio	2, 18
7	ASPØVL	A_w*		Exposed V.F. aspect ratio	2, 18
8-9		UNUSED			
10	CHRDRE	C_r*		Exposed V.F. root chord	2, 18
11-14		UNUSED			
15	MACIPE	$\bar{c}_I$*		Exposed V.F. inboard MAC	2, 18
16	MACØE	$\bar{c}_w$*		Exposed V.F. MAC	2, 18
17	MACØPE	$\bar{c}_Ø$*		Exposed V.F. outboard MAC	2, 18
18	NDTCP	σ*		Effective exposed V.F. aspect ratio	2, 18
19	SPTIPE	r_b*		AVF(23)/AVF(21)	2, 18
20		UNUSED			
21	SSPNBØ	$b_b/2$		Semi-span of inboard theoretical panel	2, 18
22		UNUSED			
23	SSPNEX	b_b*/2		Semi-span of inboard exposed panel	2, 18
24		UNUSED			
25		λ_I		Theoretical V.F. inboard taper ratio	2, 18
26	TRTIPE	λ_I*		Exposed V.F. inboard taper ratio	2, 18
27	TRTØE	λ_w*		Exposed V.F. taper ratio	2, 18
28	TRTØPE	$\lambda_Ø$*		Exposed V.F. outboard taper ratio	2, 18
29	LENGTH	*		Exposed V.F. maximum overall length	2, 18
30	XCNTEX	$\bar{X}$*		X distance from V.F. apex to 50% V.F. MAC	2, 18

VARIABLE DEFINITION OF DATA BLOCK "AVF"

LOCATION	VARIABLE NAME	ENGINEERING SYMBOL	DATCOM REFERENCE	COMMENTS/DEFINITIONS	OVERLAY
31	YCNTEX	$\overline{Y}_w$*		Exposed V.F. Y distance from body to MAC of total V.F.	2, 18
32	YCNTIE	$\overline{Y}_I$*		Exposed inboard panel Y distance from body to inboard MAC	2, 18
33	YCNTØE	$\overline{Y}_Ø$*		Exposed outboard panel Y distance from body to outboard MAC	2, 18
34	SAE000	Λ_0*		Exposed V.F. LE sweep angle, degrees; effective LE sweep angle for non-straight wings	2, 18
35		Λ_0*		Angle in radians	2, 18
36		SIN Λ_0*		Trignometric sine of Λ_0*	2, 18
37		COS Λ_0*		Trignometric cosine of Λ_0*	2, 18
38		TAN Λ_0*		Trignometric tangent of Λ_0*	2, 18
39		$(\Lambda_0^*)_T$		Test value used in Sub. ANGLES	2, 18
40-45	SAE025	$\Lambda^*_{.25}$		Exposed V.F. quarter chord sweep	2, 18
46-51	SAE050	$\Lambda^*_{.50}$		Exposed V.F. half chord sweep	2, 18
52-57	SAE100	$\Lambda^*_{1.00}$		Exposed V.F. TE sweep	2, 18
58-63	SAI000	$(\Lambda_0)_I$		Inboard panel LE sweep	2, 18
64-69	SAI025	$(\Lambda_{.25})_I$		Inboard panel quarter chord sweep	2, 18
70-75	SAI050	$(\Lambda_{.50})_I$		Inboard panel half chord sweep	2, 18
76-81	SAI100	$(\Lambda_{1.00})_I$		Inboard panel TE sweep	2, 18
82-87	SAØ000	$(\Lambda_0)_Ø$		Outboard panel LE sweep	2, 18
88-93	SAØ025	$(\Lambda_{.25})_Ø$		Outboard panel quarter chord sweep	2, 18
94-99	SAØ050	$(\Lambda_{.50})_Ø$		Outboard panel half chord sweep	2, 18
100-105	SAØ100	$(\Lambda_{1.00})_Ø$		Outboard panel TE sweep	2, 18
106-111	SAVSI	$(\Lambda_m)_I$		User specified inboard panel sweep	1,2,18
112-117	SAVSØ	$(\Lambda_m)_Ø$		User specified outboard panel sweep	1,2,18
118		λ_r		Overall taper ratio	2, 18
119	ARIP	S_I		Area of exposed inboard panel	2, 18
120		A_w		Overall aspect ratio	2, 18
121	CBARI	$\overline{c}_I$		Inboard panel theoretical MAC	2, 18

VARIABLE DEFINITION OF DATA BLOCK "AVF"

LOCATION	VARIABLE NAME	ENGINEERING SYMBOL	DATCOM REFERENCE	COMMENTS/DEFINITIONS	OVERLAY
122	CBARR	$\bar{c}_r$		V.F. mean aerodynamic chord	2, 18
123	C1	C_1	4.1.3.4	Aspect ratio classification	2, 18
124		$(1+c_1) \times \cos \Lambda_{LE}$		Aspect ratio classification	2
125		AVT (128)/AVT (124)		Aspect ratio classification	2
126		$(\alpha_0)_{M=0}$		Inviscid zero lift angle of attack	0
127		$(\alpha_{C_{L_{max}}})_{M=0}$		Inviscid max lift angle of attack	0
128				AR classification factor	2
129	RNFS	R_f		Reynolds number of V.F.	0
130		$\bar{Y}_I$		Y distance from vehicle center line to MAC of inboard panel	2, 18
131	CLALPA	C_{ℓ_α}		User defined C_{ℓ_α}	0
132	CLMAX	$C_{\ell_{max}}$		User defined $C_{\ell_{max}}$	0
133		$\bar{Y}_\emptyset$		Y distance from vehicle center line to MAC of outboard panel	2, 18
136		$\bar{Y}$			2, 18
134-137		UNUSED			
138-143	SWAFP	Λ_{AF1}			1,2
144-160		UNUSED			
161		$\bar{X}_R$		Distance from V.F. apex to V.F. MAC quarter chord	2, 18
162	CNB	n_B		b_b^*/b^*	2, 18
163		A_I		Inboard theoretical panel aspect ratio	2, 18
164		$\Delta Y'$		Geometric parameters for fictitious outboard panel of straight tapered V.F.; used to calculate wing pitching moments	2, 18
165		$(b_0^*/2)'$			2, 18
166		C_b'			2, 18
167		$(S_\emptyset^*)'$			2, 18
168		$(A_\emptyset^*)'$			2, 18
169		$(\lambda_\emptyset^*)'$			2, 18
170-173		UNUSED			

VARIABLE DEFINITION OF DATA BLOCK "AVF"

LOCATION	VARIABLE NAME	ENGINEERING SYMBOL	DATCOM REFERENCE	COMMENTS/DEFINITIONS	OVERLAY
174	TØVC	$(t/c)_I$		User defined thickness ratio of inboard panel, or total V.F.	2, 18
175-180	SATCM	$(\Lambda)_{t/c\ max}$		V.F. sweep at the maximum thickness chord station	2, 18
181-186	SATCMØ	$[(\Lambda)_{t/c\ max}]_Ø$		Outboard panel sweep at the maximum thickness chord station	2, 18
187-192	SATCMI	$[(\Lambda)_{t/c\ max}]_I$		Inboard panel sweep at the maximum thickness chord station	2, 18
193-194		UNUSED			
195		X_R		X distance from V.F. apex to LE of total V.F. MAC	2, 18

VERTICAL TAIL PLANFORM GEOMETRIC PROPERTIES

VARIABLE DEFINITION OF DATA BLOCK "AVT"

LOCATION	VARIABLE NAME	ENGINEERING SYMBOL	DATCOM REFERENCE	COMMENTS/DEFINITIONS	OVERLAY
1	ARIPE	S_I*		Exposed inboard V.T. area	2, 18
2	ARØPE	$S_Ø$*		Exposed outboard V.T. area	2, 18
3	ARØVAL	S_r*		Exposed V.T. area	2, 18
4	ARREF	S_r		Theoretical V.T. area	2, 18
5	ASPIPE	A_I*		Exposed inboard V.T. aspect ratio	2, 18
6	ASPØPE	$A_Ø$*		Exposed outboard V.T. aspect ratio	2, 18
7	ASPØVL	A_w*		Exposed V.T. aspect ratio	2, 18
8-9		UNUSED			
10	CHRDRE	C_r*		Exposed V.T. root chord	2, 18
11-14		UNUSED			
15	MACIPE	$\bar{c}_I$*		Exposed V.T. inboard MAC	2, 18
16	MACØE	$\bar{c}_w$*		Exposed V.T. MAC	2, 18
17	MACØPE	$\bar{c}_Ø$*		Exposed V.T. outboard MAC	2, 18
18	NDTCP	σ*		Effective exposed V.T. aspect ratio	2, 18
19	SPTIPE	r_b*		AVT(23)/AVT(21)	2, 18
20		UNUSED			
21	SSPNBØ	$\ell_b/2$		Semi-span of inboard theoretical panel	2, 18
22		UNUSED			
23	SSPNEX	b_b*/2		Semi-span of inboard exposed panel	2, 18
24		UNUSED			
25		λ_I		Theoretical V.T. inboard taper ratio	2, 18
26	TRTIPE	λ_I*		Exposed V.T. inboard taper ratio	2, 18
27	TRTØE	λ_w*		Exposed V.T. taper ratio	2, 18
28	TRTØPE	$\lambda_Ø$*		Exposed V.T. outboard taper ratio	2, 18
29	LENGTH	ℓ*		Exposed V.T. maximum overall length	2, 18
30	XCNTEX	$\bar{X}$*		X distance from V.T. apex to 50% V.T. MAC	2, 18

VARIABLE DEFINITION OF DATA BLOCK "AVT"

LOCATION	VARIABLE NAME	ENGINEERING SYMBOL	DATCOM REFERENCE	COMMENTS/DEFINITIONS	OVERLAY
31	YCNTEX	$\bar{Y}_w$*		Exposed V.T. Y distance from body to MAC of total V.T.	2, 18
32	YCNTIE	$\bar{Y}_I$*		Exposed inboard panel Y distance from body to inboard MAC	2, 18
33	YCNTØE	$\bar{Y}_Ø$*		Exposed outboard panel Y distance from body to outboard MAC	2, 18
34	SAE000	Λ_0*		Exposed V.T. LE sweep angle, degrees; effective LE sweep angle for non-straight V.T.	2, 18
35		Λ_0*		Angle in radians	2, 18
36		SIN Λ_0*		Trignometric sine of Λ_0*	2, 18
37		COS Λ_0*		Trignometric cosine of Λ_0*	2, 18
38		TAN Λ_0*		Trignometric tangent of Λ_0*	2, 18
39		$(\Lambda_0^*)_T$		Test value used in Sub. ANGLES	2, 18
40-45	SAE025	$\Lambda^*_{.25}$		Exposed V.T. quarter chord sweep	2, 18
46-51	SAE050	$\Lambda^*_{.50}$		Exposed V.T. half chord sweep	2, 18
52-57	SAE100	$\Lambda^*_{1.00}$		Exposed V.T. TE sweep	2, 18
58-63	SAI000	$(\Lambda_0)_I$		Inboard panel LE sweep	2, 18
64-69	SAI025	$(\Lambda_{.25})_I$		Inboard panel quarter chord sweep	2, 18
70-75	SAI050	$(\Lambda_{.50})_I$		Inboard panel half chord sweep	2, 18
76-81	SAI100	$(\Lambda_{1.00})_I$		Inboard panel TE sweep	2, 18
82-87	SAØ000	$(\Lambda_0)_Ø$		Outboard panel LE sweep	2, 18
88-93	SAØ025	$(\Lambda_{.25})_Ø$		Outboard panel quarter chord sweep	2, 18
94-99	SAØ050	$(\Lambda_{.50})_Ø$		Outboard panel half chord sweep	2, 18
100-105	SAØ100	$(\Lambda_{1.00})_Ø$		Outboard panel TE sweep	2, 18
106-111	SAVSI	$(\Lambda_m)_I$		User specified inboard panel sweep	1,2,18
112-117	SAVSØ	$(\Lambda_m)_Ø$		User specified outboard panel sweep	1,2,18
118		λ_r		Overall taper ratio	2, 18
119	ARIP	S_I		Area of exposed inboard panel	2, 18
120		A_w		Overall aspect ratio	2, 18
121	CBARI	$\bar{c}_I$		Inboard panel theoretical MAC	2, 18

VARIABLE DEFINITION OF DATA BLOCK "AVT"

LOCATION	VARIABLE NAME	ENGINEERING SYMBOL	DATCOM REFERENCE	COMMENTS/DEFINITIONS	OVERLAY
122	CBARR	$\bar{c}_r$		V.T. mean aerodynamic chord	2, 18
123	C1	C_1	4.1.3.4	Aspect ratio classification	2, 18
124		$(1+c_1) \times \cos \Lambda_{LE}$		Aspect ratio classification	2
125		AVT (128)/AVT (124)		Aspect ratio classification	2
126		$(\alpha_0)_{M=0}$		Inviscid zero lift angle of attack	0
127		$(\alpha_{C_{L_{max}}})_{M=0}$		Inviscid max lift angle of attack	0
128				AR classification factor	2
129	RNFS	R_f		Reynolds number of V.T.	0
130		$\bar{Y}_I$		Y distance from vehicle center line to MAC of inboard panel	2, 18
131	CLALPA	C_{ℓ_α}		User defined C_{ℓ_α}	0
132	CLMAX	$C_{\ell_{max}}$		User defined $C_{\ell_{max}}$	0
133		$\bar{Y}_\emptyset$		Y distance from vehicle center line to MAC of outboard panel	2, 18
136		$\bar{Y}$			
134-137		UNUSED			2, 18
138-143	SWAFP	Λ_{AFI}			1,2
144-160		UNUSED			
161		$\bar{X}_R$		Distance from V.T. apex to V.T. MAC quarter chord	2, 18
162	CNB	n_B		b_b^*/b^*	2, 18
163		A_I		Inboard theoretical panel aspect ratio	2, 18
164		$\Delta Y'$		Geometric parameters for fictitious outboard panel of straight tapered V.T.; used to calculate wing pitching moments	2, 18
165		$(b_0^*/2)'$			2, 18
166		C_b'			2, 18
167		$(S_\emptyset^*)'$			2, 18
168		$(A_\emptyset^*)'$			2, 18
169		$(\lambda_\emptyset^*)'$			2, 18
170-173		UNUSED			

VARIABLE DEFINITION OF DATA BLOCK "AVT"

LOCATION	VARIABLE NAME	ENGINEERING SYMBOL	DATCOM REFERENCE	COMMENTS/DEFINITIONS	OVERLAY
174	TØVC	$(t/c)_I$		User defined thickness ratio of inboard panel, or total V.T.	2, 18
175-180	SATCM	$(\Lambda)_{t/c\ max}$		V.T. sweep at the maximum thickness chord station	2, 18
181-186	SATCMØ	$[(\Lambda)_{t/c\ max}]_{Ø}$		Outboard panel sweep at the maximum thickness chord station	2, 18
187-192	SATCMI	$[(\Lambda)_{t/c\ max}]_I$		Inboard panel sweep at the maximum thickness chord station	2, 18
193-194		UNUSED			
195		X_R		X distance from V.T. apex to LE of total V.T. MAC	2, 18

FLIGHT CONDITIONS AND SUBSONIC WING AERODYNAMICS

VARIABLE DEFINITION OF DATA BLOCK "B"

LOCATION	VARIABLE NAME	ENGINEERING SYMBOL	DATCOM REFERENCE	COMMENTS/DEFINITIONS	OVERLAY
1	MACH	M		Mach number	0
2	BETA	β		Mach number parameter	0
3-22		$[C_{L_W})_J]_{M=0}$		Incompressible wing lift coefficient	0
23-42	ALSCHD	α		$\alpha_{SCHD} + \alpha_i$	2, 4
43	ACCLMX	$\alpha_{C_{L_{max}}}$		Maximum lift angle of attack	15
44	CCLMAX	$C_{L_{max}}$		Maximum lift coefficient	15
45	CNAARF	$(C_{N_{\alpha\alpha}})_{REF}$	4.1.3.3	Increment in C_N' at $C_{L_{max}}$, Ref.	15
46		$(C_{D_o})_w$		Wing zero lift drag coefficient	3
47		$(C_{m_o})_w$		Wing zero lift pitching moment coefficient	31
48		$(C_{L_\alpha})_{M=0}$		Wing incompressible lift curve slope	0
49	ALPHØM	$\alpha_{\emptyset_M}$		Wing zero lift angle of attack at Mach	15

SUBSONIC BODY PARAMETERS

VARIABLE DEFINITION OF DATA BLOCK "BD"

LOCATION	VARIABLE NAME	ENGINEERING SYMBOL	DATCOM REFERENCE	COMMENTS/DEFINITIONS	OVERLAY
1		ℓ_B		Total body length	4,6, 23
2		$X_{B_{max}}$		X distance from body nose to max cross section area	4,6
3		S_{max}		Body maximum cross sectional area	4,6
4		$S_{\ell_{nose}}$			6
5		ℓ_{nose}			2,6
6		S_o	4.2.1.1	Body cross-sectional area at X_o	6
7		X_o	4.2.1.1	X station where flow ceases to be potential	6
8		$(X_{\bar{c}/4})_H$			10
9		K_2-K_1	4.2.1.1	Figure 4.2.1.1-20a	6
10		$(C_{D_o})_B$		Body zero lift drag coefficient	6
11		UNUSED		X_{nose} - X-station of body nose	1
12-29		$(L_{AF})_H$			10
30		$(L_{NF})_H$			10
31		UNUSED			
32		$X_{CG}=X_M$		X_{CG}	1
33		UNUSED			
34-54		$(\ell/R)_B$			4,6
55		S_B		Body max. cross. area	4,6
56		S_b		Body base area	4,6
57		$(\Delta X)_H$			10,28
58		$(C_{D_F})_{DB}$		Body zero lift skin friction drag coefficient based on S_{max}	4,6
59		C_{D_b}		Body zero lift base drag coefficient based on S_{Ref}	4,6
60		C_{D_o}		Body zero lift drag coefficient based on S_{Ref}	4,6
61		$(C_{m_o})_B$		Body zero lift pitching moment coefficient	4,7
62		$(\Delta X_{AC})_H$			10,28
63		$(Z_{AC})_H$			10,28
64					

VARIABLE DEFINITION OF DATA BLOCK "BD"

LOCATION	VARIABLE NAME	ENGINEERING SYMBOL	DATCOM REFERENCE	COMMENTS/DEFINITIONS	OVERLAY
65		X_W			1
66		ΔX_W		Distance from wing apex to LE of wing exposed root chord	2,20
67		ΔX_{CG}		$X_{CG}-X_W-\Delta X_W$	2
68		Z_{WE}			2
69		X_{AC}			0
70		Z_{AC}			0
71		$(\Delta X_{AC})_W$			0
72		L_{N_F}			0
73		L_{A_F}			0
74		Z_W			1
75		(ℓ_B/d_B)		Body fineness ratio	4,6
76		η	4.2.1.2	Figure 4.2.1.2-35a	6
77		$(\alpha_i)_W$		User defined wing incidence	1
78		$\sin(\alpha_i)_W$			2
79		$\cos(\alpha_i)_W$			2
80		$\tan(\alpha_i)_W$			2
81		α_0			1,4
82		Z_{CG}		Used defined Z_{CG}	1
83		$X_{\bar{c}/4}$			0,20
84		$(\Delta X_{CG})_H$			10,28
85		$(d_b)_{max}$		Max body diameter	4,6
86		d_b		Base diameter	4,6
87		d_B		Body diameter	2
88		$\int_{x_o}^{\ell_b} \eta\, C_{d_c} dx$	4.2.1.2	Eqn. 4.2.1.2-a	6
89		ΔX_H		Distance from H.T. apex to LE of HT exposed root chord	
90		$\ell_B R_f$			4,6
91		$(R_\ell)_B$			4,6
92		C_{f_B}		Body skin friction coefficient	4,6
93		S_S		Body wetted area	6
94	NALPHA				4,6

VARIABLE DEFINITION OF DATA BLOCK "BD"

LOCATION	VARIABLE NAME	ENGINEERING SYMBOL	DATCOM REFERENCE	COMMENTS/DEFINITIONS	OVERLAY
95-114		$(C_{D_\alpha})_{WB_J}$			10
115-134		$(C_{m_{C_{NV}}})_{JBA}$			4
135-154		$(C_{d_C})_J$	4.2.1.2	Figure 4.2.1.2-35b	6
155-174		$(C_{L_P})_J$		Potential flow lift term	6
175-194		-dS/dX			6
195-214		$(C_{L_V})_J$		Vortex lift term	6
215-234		$(C_{D_L})_J$			4,6
235-254		$(C_{m_{C_{N_P}}})_{JBA}$			4
255-274		α_R			2,20,
275		S_P		Body Planform Area	25
276-295		$(C_{D_N})_{WB}$		C_D, C_L and C_m of body segment	4,6,
296-315		$(C_{L_N})_{WB}$		from nose tip to leading edge	19
316-335		$(C_{m_N})_{WB}$		of exposed wing	
336-355		$(C_{D_N})_{HB}$		C_D, C_L and C_m of body segment	4,6,
356-375		$(C_{L_N})_{HB}$		from nose tip to leading edge	19
376-395		$(C_{m_N})_{HB}$		of exposed H.T.	
535		(b/2-b*/2)			7,20
536-660		UNUSED			
661-680		$(C_{N_V})_{JBA}$			4
681-700		$(C_{N_P})_{JBA}$			4
701-720	XØL	X/L_{Ref}			4
721-740	ZPØL	Z'/L_{Ref}			4
741-760	ZP	Z'			4
761		$(X_{AC})_H$			10,28
762		Z_{H_E}			10,28

BODY INPUT VARIABLES

VARIABLE DEFINITION OF DATA BLOCK "BDIN"

LOCATION	VARIABLE NAME	ENGINEERING SYMBOL	DATCOM REFERENCE	COMMENTS/DEFINITIONS	OVERLAY
1	NX			Input via NAMELIST BODY	
2-21	X	X_i			
22-41	S	S_i			
42-61	P	P_i			
62-81	R	R_i			
82-101	ZU	Z_{u_i}			
102-121	ZL	Z_{L_i}			
122	BNOSE				
123	BTAIL				
124	BLN	ℓ_N			
125	BLA	ℓ_A			
126	DS	d_s			
127	TYPE				
128	METHOD				

FLIGHT CONDITIONS AND SUBSONIC HORIZONTAL TAIL AERODYNAMICS

VARIABLE DEFINITION OF DATA BLOCK "BHT"

LOCATION	VARIABLE NAME	ENGINEERING SYMBOL	DATCOM REFERENCE	COMMENTS/DEFINITIONS	OVERLAY
1	MACH	M		Mach number	0
2	BETA	β		Mach number parameter	0
3-22		$[(C_{L_W})_J]_{M=0}$		Incompressible HT lift coefficient	0
23-42	ALSCHD	α		$\alpha_{SCHD} + \alpha_i$	2,10, 16
43	ACCLMX	$\alpha C_{L_{max}}$		Maximum lift angle of attack	16
44	CCLMAX	$C_{L_{max}}$		Maximum lift coefficient	16
45	CNAARF	$(C_{N_{\alpha\alpha}})_{Ref}$	4.1.3.3	Increment in C_N at $C_{L_{max}}$, ref.	16
46		$(C_{D_o})_W$		HT zero lift drag coefficient	5
47		$(C_{m_o})_W$		HT zero lift pitching moment coefficient	33
48		$(C_{L_\alpha})_{M=0}$		HT incompressible lift curve slope	0
49	ALPHØM	$\alpha_{\emptyset_M}$		HT zero lift angle of attack at Mach	16

SUBSONIC WING PITCHING MOMENT PARAMETERS

VARIABLE DEFINITION OF DATA BLOCK "C"

LOCATION	VARIABLE NAME	ENGINEERING SYMBOL	DATCOM REFERENCE	COMMENTS/DEFINITIONS	OVERLAY
1		C_{m_O}, $C_{m_{O_R}}$	4.1.4.1	User defined zero lift C_m	31
2		$C_{m_{O_{TIP}}}$	4.1.4.1	User defined zero lift C_m of outboard panel	31
3		$C_{m_{O_M}}/C_{m_{O_M}=0}$		Figure 4.1.4.1-7	31
4		$\Delta C_{m_O}/\theta$	4.1.4.1	C_{m_O} change due to unit wing twist	31
5		C_{m_O}	4.1.4.1	C_{m_O}	31
6		X_{ac}/c_r	4.1.4.2	Distance from wing apex to the a.c. in root chords	31
7		dC_m/dC_L	4.1.4.2	Eqn. 4.1.4.2-c	31
8		C_{m_α}	4.1.4.2		31
9		$A_w \tan \Lambda_o^*$	4.1.4.3		31
10		$\tan \Lambda_o^*/\beta$	4.1.4.3		31
11		$\beta/\tan \Lambda_o^*$	4.1.4.3		31
12		$A_I^* \tan \Lambda_{OI}$	4.1.4.3	Inboard panel	31
13		$\tan \Lambda_{OI}/\beta$	4.1.4.3	Inboard panel	31
14		$\beta/\tan \Lambda_{OI}$	4.1.4.3	Inboard panel	31
15		$A_\emptyset \tan \Lambda_{O\emptyset}$	4.1.4.3	Outboard panel	31
16		$\tan \Lambda_{O\emptyset}/\beta$	4.1.4.3	Outboard panel	31
17		$\beta/\tan \Lambda_{O\emptyset}$	4.1.4.3	Outboard panel	31
18		$(X_{ac}/c_r)_I$	4.1.4.3	Inboard panel	31
19		$(X_{ac}/c_r)_\emptyset$	4.1.4.3	Outboard panel	31
20		$(X_{ac})'_\emptyset/c_{r_I}$	4.1.4.3		31
21		σ	4.1.4.3	Eqn. 4.1.4.3-f	31
22		$(X_{CP}/C_r)_{\alpha=90°}$	4.1.4.3	Wing normalized X_{CP} at 90 degrees angle of attack	31
23		C_3	4.1.4.3	Figure 4.1.4.3-21b	31
24		$(1+C_3)A \times \tan \Lambda_o^*$	4.1.4.3		31
25		$\Delta(X_{CP}/C_r)_2$	4.1.4.3	Figure 4.1.4.3-21b & -22a	31
26		$(X_{CP}/C_r)_1$	4.1.4.3	Figure 4.1.4.3-21a	
27		$(X_{CP}/C_r)_{C_{L_{Max}}}$	4.1.4.3	Eqn. 4.1.4.3-b	31

VARIABLE DEFINITION OF DATA BLOCK "C"

LOCATION	VARIABLE NAME	ENGINEERING SYMBOL	DATCOM REFERENCE	COMMENTS/DEFINITIONS	OVERLAY
28		$\sin\alpha_{C_{L_{max}}}$	4.1.4.3	$\alpha_{C_{L_{max}}}$ from 4.1.3.4	31
29		$\tan\alpha_{C_{L_{max}}}$	4.1.4.3		31
30		$(X_{CP}/C_r)_{ref}$	4.1.4.3	Eqn. 4.1.4.3-c	31
31		$\sin\alpha_i$	4.1.4.3		31
32		$\cos\alpha_i$	4.1.4.3		31
33		$\tan\alpha_i$	4.1.4.3		31
34		$A\cos\Lambda_o^*$	4.1.4.3		31
35		$\lvert\tan\alpha_i/\tan\alpha_{C_{L_{max}}}\rvert$	4.1.4.3		31
36		α_{Ref}	4.1.4.3		31
37			4.1.4.3	Aspect ratio index, Figure 4.1.4.3-24a	31
38		$\Delta(X_{CP}/C_r)_4$	4.1.4.3		31
39		$\Delta(X_{CP}/C_r)_3$	4.1.4.3		31
40			4.1.4.3	Stability index, Figure 4.1.4.3-22b	31
41		$\Delta(X_{CP}/C_r)$	4.1.4.3		31
42		$\Delta\alpha$	4.1.4.3		31
43		$\Delta(X_{CP}/C_r)/\Delta\alpha$	4.1.4.3		31
44		$(X_{CP}/C_r)_J$	4.1.4.3		31
45		UNUSED			
46		$\tan\alpha_{C_{L_{max}}}/\tan\alpha$	4.1.4.3		31
47	TEMP2	$\tan\alpha_{C_{L_{max}}}/\tan\alpha_{ref}$	4.1.4.3		31
48		$C_r/\bar{C}_r$	4.1.4.3		31
49		$(X_{CP}/C_r)_{\alpha_{ref}}$	4.1.4.3		31
50		$(X_{CP}/C_r)_{3\,\alpha_{ref}}$	4.1.4.3		31

VARIABLE DEFINITION OF DATA BLOCK "C"

LOCATION	VARIABLE NAME	ENGINEERING SYMBOL	DATCOM REFERENCE	COMMENTS/DEFINITIONS	OVERLAY
51		$(X_{CP}/C_r)_4$ α_{ref}	4.1.4.3		31

SUBSONIC HORIZONTAL TAIL PITCHING MOMENT PARAMETERS

VARIABLE DEFINITION OF DATA BLOCK "CHT"

LOCATION	VARIABLE NAME	ENGINEERING SYMBOL	DATCOM REFERENCE	COMMENTS/DEFINITIONS	OVERLAY
1		C_{m_o}, $C_{m_{oR}}$	4.1.4.1	User defined zero lift C_m	33
2		$C_{m_{oTIP}}$	4.1.4.1	User defined zero lift C_m of outboard panel	33
3		$(C_{m_o})_M/(C_{m_o})_{M=0}$		Figure 4.1.4.1-7	33
4		$\Delta C_{m_o}/\theta$	4.1.4.1	C_{m_o} change due to unit HT twist	33
5		C_{m_o}	4.1.4.1	C_{m_o}	33
6		X_{ac}/c_r	4.1.4.2	Distance from HT apex to the a.c. in root chords	33
7		dC_m/dC_L	4.1.4.2	Eqn. 4.1.4.2-c	33
8		C_{m_α}	4.1.4.2		33
9		$A_w \tan \Lambda_o^*$	4.1.4.3		33
10		$\tan \Lambda_o^*/\beta$	4.1.4.3		33
11		$\beta/\tan \Lambda_o^*$	4.1.4.3		33
12		$A_I^* \tan \Lambda_{0I}$	4.1.4.3	Inboard panel	33
13		$\tan \Lambda_{0I}/\beta$	4.1.4.3	Inboard panel	33
14		$\beta/\tan \Lambda_{0I}$	4.1.4.3	Inboard panel	33
15		$A_\emptyset \tan \Lambda_{o\emptyset}$	4.1.4.3	Outboard panel	33
16		$\tan \Lambda_{o\emptyset}/\beta$	4.1.4.3	Outboard panel	33
17		$\beta/\tan \Lambda_{o\emptyset}$	4.1.4.3	Outboard panel	33
18		$(X_{ac}/c_r)_I$	4.1.4.3	Inboard panel	33
19		$(X_{ac}/c_r)_\emptyset$	4.1.4.3	Outboard panel	33
20		$(X_{ac})'_\emptyset/c_{r_I}$	4.1.4.3		33
21		σ	4.1.4.3	Eqn. 4.1.4.3-f	33
22		$(X_{CP}/C_r)_{\alpha=90°}$	4.1.4.3	HT normalized X_{CP} at 90 degrees angle of attack	33
23		C_3	4.1.4.3	Figure 4.1.4.3-21b	33
24		$(1+C_3)A \times \tan \Lambda_o^*$	4.1.4.3		33
25		$\Delta(X_{CP}/C_r)_2$	4.1.4.3	Figure 4.1.4.3-21b & -22a	33
26		$(X_{CP}/C_r)_1$	4.1.4.3	Figure 4.1.4.3-21a	33
27		$(X_{CP}/C_r)_{C_{L_{Max}}}$	4.1.4.3	Eqn. 4.1.4.3-b	33

VARIABLE DEFINITION OF DATA BLOCK "CHT"

LOCATION	VARIABLE NAME	ENGINEERING SYMBOL	DATCOM REFERENCE	COMMENTS/DEFINITIONS	OVERLAY
28		$\sin\alpha_{C_{L_{max}}}$	4.1.4.3	$\alpha_{C_{L_{max}}}$ from 4.1.3.4	33
29		$\tan\alpha_{C_{L_{max}}}$	4.1.4.3		33
30		$(X_{CP}/C_r)_{ref}$	4.1.4.3	Eqn. 4.1.4.3-c	33
31		$\sin\alpha_i$	4.1.4.3		33
32		$\cos\alpha_i$	4.1.4.3		33
33		$\tan\alpha_i$	4.1.4.3		33
34		$A\cos\Lambda_o^*$	4.1.4.3		33
35		$\lvert\tan\ _i/\tan\alpha_{C_{L_{max}}}\rvert_{\alpha_{Ref}}$	4.1.4.3		33
36			4.1.4.3	Aspect ratio index, Figure 4.1.4.3-24a	33
37			4.1.4.3		33
38		$\Delta(X_{CP}/C_r)_4$	4.1.4.3		33
39		$\Delta(X_{CP}/C_r)_3$	4.1.4.3	Stability index, Figure 4.1.4.3-22b	33
40			4.1.4.3		33
41		$\Delta(X_{CP}/C_r)_{\Delta\alpha}$	4.1.4.3		33
42		$\Delta(X_{CP}/C_r)/\Delta\alpha$	4.1.4.3		33
43		$(X_{CP}/C_r)_J$	4.1.4.3		33
44		UNUSED			
45		$\tan\alpha_{C_{L_{max}}}/\tan\alpha$	4.1.4.3		33
46	TEMP2	$\tan\alpha_{C_{L_{max}}}/\tan\alpha_{ref}$	4.1.4.3		33
47		$C_r/\bar{C}_r$	4.1.4.3		33
48		$(X_{CP}/C_r)_{\alpha_{ref}}$	4.1.4.3		33
49		$(X_{CP}/C_r)_{3\alpha_{ref}}$	4.1.4.3		33
50					

VARIABLE DEFINITION OF DATA BLOCK "CHT"

LOCATION	VARIABLE NAME	ENGINEERING SYMBOL	DATCOM REFERENCE	COMMENTS/DEFINITIONS	OVERLAY
51		$(X_{CP}/C_r)_{4\ \alpha_{ref}}$	4.1.4.3		33

SUBSONIC WING DRAG PARAMETERS

VARIABLE DEFINITION OF DATA BLOCK "D"

LOCATION	VARIABLE NAME	ENGINEERING SYMBOL	DATCOM REFERENCE	COMMENTS/DEFINITIONS	OVERLAY
1		R'			3
2		ℓ/k		A(16)/ROUGFC	3
3		S^*/S_r		Ratio of exposed wing to reference areas	3
4		$R_\emptyset$	4.1.5.2	Figure 4.1.5.2-53	3
5		R_I	4.1.5.2	Figure 4.1.5.2-53	3
6		$(R_V)_\emptyset$			3
7		$(R_V)_I$			3
8		$(R_{LER})_\emptyset$		$A(201)*(R_{LER})_\emptyset$	3
9		$(R_{LER})_I$		$A(201)*(R_{LER})_I$	3
10		C_f		Wing skin friction coefficient	3
11		C_{f_I}		Inboard panel skin friction coefficient	3
12		$C_{f_\emptyset}$		Outboard panel skin friction coefficient	3
13		R_{LS}	4.1.5.1	Figure 4.1.5.1-28b	3
14		R_L			3
15		$(R_\ell)_I$			3
16		$(R_\ell)_\emptyset$			3
17		RN			3
18		$(RN)_I$		Inboard panel Reynolds number	3
19		$(RN)_\emptyset$		Outboard panel Reynolds number	3
20		C_{D0}		Wing zero lift drag coefficient	3
21		$(C_{D0})_I$		Inboard panel C_{D0}	3
22		$(C_{D0})_\emptyset$		Outboard panel C_{D0}	3
23		$(R_{LS})_I$		Inboard panel R_{LS}	3
24		$(R_{LS})_\emptyset$		Outboard panel R_{LS}	3
25		$(\Delta C_{D_L})_J$			3
26		R_{LER}			3
27		R_V			3
28		$A\lambda/\cos\Lambda_{LE}$			3
29		R	4.1.5.2	Figure 4.1.5.2-53	3
30		e	4.1.5.2	Figure 4.1.5.2-i	3

VARIABLE DEFINITION OF DATA BLOCK "D"

LOCATION	VARIABLE NAME	ENGINEERING SYMBOL	DATCOM REFERENCE	COMMENTS/DEFINITIONS	OVERLAY
31	BA	βA			3
32	BW	βW			3
33		V			3
34		C_{D_L}			3
35		C_{D_J}		Wing drag coefficient	3
36-55		$(C_{D_L})_J$		Wing induced drag coefficient	3

SUBSONIC HORIZONTAL TAIL DRAG PARAMETERS

VARIABLE DEFINITION OF DATA BLOCK "DHT"

LOCATION	VARIABLE NAME	ENGINEERING SYMBOL	DATCOM REFERENCE	COMMENTS/DEFINITIONS	OVERLAY
1		R'			5
2		ℓ/k		AHT(16)/ROUGFC	5
3		S^*/S_r		Ratio of exposed HT to reference areas	5
4		$R_\emptyset$	4.1.5.2	Figure 4.1.5.2-53	5
5		R_I	4.1.5.2	Figure 4.1.5.2-53	5
6		$(R_V)_\emptyset$			5
7		$(R_V)_I$			5
8		$(R_{LER})_\emptyset$		AHT(201)*$(R_{LER})_\emptyset$	5
9		$(R_{LER})_I$		AHT(201)*$(R_{LER})_I$	5
10		C_f		HT skin friction coefficient	5
11		C_{f_I}		Inboard panel skin friction coefficient	5
12		$C_{f_\emptyset}$		Outboard panel skin friction coefficient	5
13		R_{LS}	4.1.5.1	Figure 4.1.5.1-28b	5
14		R_L			5
15		$(R_\ell)_I$			5
16		$(R_\ell)_\emptyset$			5
17		RN			5
18		$(RN)_I$		Inboard panel Reynolds number	5
19		$(RN)_\emptyset$		Outboard panel Reynolds number	5
20		C_{D_0}		HT zero lift drag coefficient	5
21		$(C_{D0})_I$		Inboard panel C_{D0}	5
22		$(C_{D0})_\emptyset$		Outboard panel C_{D0}	5
23		$(R_{LS})_I$		Inboard panel R_{LS}	5
24		$(R_{LS})_\emptyset$		Outboard panel R_{LS}	5
25		$(\Delta C_{D_L})_J$			5
26		R_{LER}		AHT(201)*$(R_{LER})_I$	5
27		R_V			5
28		$A\lambda/\cos\Lambda_{LE}$			5
29		R	4.1.5.2	Figure 4.1.5.2-53	5
30		e	4.1.5.2	Figure 4.1.5.2-i	5

VARIABLE DEFINITION OF DATA BLOCK "DHT"

LOCATION	VARIABLE NAME	ENGINEERING SYMBOL	DATCOM REFERENCE	COMMENTS/DEFINITIONS	OVERLAY
31	BA	βA			5
32	BW	βW			5
33		V			5
34		C_{D_L}			5
35		C_{D_J}		HT drag coefficient	5
36-55		$(C_{D_L})_J$		HT induced drag coefficient	5

SUBSONIC VENTRAL FIN DRAG PARAMETERS

VARIABLE DEFINITION OF DATA BLOCK "DVF"

LOCATION	VARIABLE NAME	ENGINEERING SYMBOL	DATCOM REFERENCE	COMMENTS/DEFINITIONS	OVERLAY
1		R'			8
2		ℓ/k		AVF(16)/ROUGFC	8
3		S^*/S_r		Ratio of exposed VF to reference areas	8
4		$R_{\emptyset}$	4.1.5.2	Figure 4.1.5.2-53	8
5		R_I	4.1.5.2	Figure 4.1.5.2-53	8
6		$(R_V)_{\emptyset}$			8
7		$(R_V)_I$			8
8		$(R_{LER})_{\emptyset}$			8
9		$(R_{LER})_I$			8
10		C_f		V.F. skin friction coefficient	8
11		C_{f_I}		Inboard panel skin friction coefficient	8
12		$C_{f_{\emptyset}}$		Outboard panel skin friction coefficient	8
13		R_{LS}	4.1.5.1	Figure 4.1.5.1-28b	8
14		R_L			8
15		$(R_\ell)_I$			8
16		$(R_\ell)_{\emptyset}$			8
17		RN			8
18		$(RN)_I$		Inboard panel Reynolds number	8
19		$(RN)_{\emptyset}$		Outboard panel Reynolds number	8
20		C_{D_0}		VF zero lift drag coefficient	8
21		$(C_{D_0})_I$		Inboard panel C_{D_0}	8
22		$(C_{D_0})_{\emptyset}$		Outboard panel C_{D_0}	6
23		$(R_{LS})_I$		Inboard panel R_{LS}	8
24		$(R_{LS})_{\emptyset}$		Outboard panel R_{LS}	8
25		$(\Delta C_{D_L})_J$			8
26		R_{LER}			8
27		R_V			8
28		$A\lambda/\cos \Lambda_{LE}$			8
29		R	4.1.5.2	Figure 4.1.5.2-53	8
30		e	4.1.5.2	Figure 4.1.5.2-1	8

VARIABLE DEFINITION OF DATA BLOCK "DVF"

LOCATION	VARIABLE NAME	ENGINEERING SYMBOL	DATCOM REFERENCE	COMMENTS/DEFINITIONS	OVERLAY
31	BA	βA			8
32	BW	βW			8
33		V			8
34		C_{D_L}			8
35		C_{D_J}		VF drag coefficient	8
36-55		$(C_{D_L})_J$		VF induced drag coefficient	8

SUBSONIC VERTICAL TAIL DRAG PARAMETERS

VARIABLE DEFINITION OF DATA BLOCK "DVT"

LOCATION	VARIABLE NAME	ENGINEERING SYMBOL	DATCOM REFERENCE	COMMENTS/DEFINITIONS	OVERLAY
1		R'			8
2		ℓ/k		AVT(16)/ROUGFC	8
3		S^*/S_r		Ratio of exposed VT to reference areas	8
4		$R_\emptyset$	4.1.5.2	Figure 4.1.5.2-53	8
5		R_I	4.1.5.2	Figure 4.1.5.2-53	8
6		$(R_V)_\emptyset$			8
7		$(R_V)_I$			8
8		$(R_{LER})_\emptyset$			8
9		$(R_{LER})_I$			8
10		C_f		V.T. skin friction coefficient	8
11		C_{f_I}		Inboard panel skin friction coefficient	8
12		$C_{f\emptyset}$		Outboard panel skin friction coefficient	8
13		R_{LS}	4.1.5.1	Figure 4.1.5.1-28b	8
14		R_L			8
15		$(R_\ell)_I$			8
16		$(R_\ell)_\emptyset$			8
17		RN			8
18		$(RN)_I$		Inboard panel Reynolds number	8
19		$(RN)_\emptyset$		Outboard panel Reynolds number	8
20		C_{D_O}		VT zero lift drag coefficient	8
21		$(C_{D_O})_I$		Inboard panel C_{D_O}	8
22		$(C_{D_O})_\emptyset$		Outboard panel C_{D_O}	8
23		$(R_{LS})_I$		Inboard panel R_{LS}	8
24		$(R_{LS})_\emptyset$		Outboard panel R_{LS}	8
25		$(\Delta C_{D_L})_J$			8
26		R_{LER}			8
27		R_V			8
28		$A\lambda/\cos\Lambda_{LE}$			8
29		R	4.1.5.2	Figure 4.1.5.2-53	8
30		e	4.1.5.2	Figure 4.1.5.2-i	8

VARIABLE DEFINITION OF DATA BLOCK "DVT"

LOCATION	VARIABLE NAME	ENGINEERING SYMBOL	DATCOM REFERENCE	COMMENTS/DEFINITIONS	OVERLAY
31	BA	βA			8
32	BW	βW			8
33		V			8
34		C_{D_L}			8
35		C_{D_J}		VT drag coefficient	8
36-55		$(C_{D_L})_J$		VT induced drag coefficient	8

SUPERSONIC DOWNWASH VARIABLES

VARIABLE DEFINITION OF DATA BLOCK "DWA"

LOCATION	VARIABLE NAME	ENGINEERING SYMBOL	DATCOM REFERENCE	COMMENTS/DEFINITIONS	OVERLAY
1	MACH	M		Mach number	21
2	BETA	β		Mach number parameter	21
3	X(1)	$2X_1/\beta_{bw}$	4.4.1		21
4	X(2)	$2X_2/\beta_{bw}$	4.4.1		21
5	Y(1)	$2Y_1/bw$	4.4.1		21
6	Y(2)	$2Y_2/bw$	4.4.1		21
7	Z(1)	$2Z_1/bw$	4.4.1		21
8	Z(2)	$2Z_2/bw$	4.4.1		21
9-28	ALPHA	$\alpha_J + \alpha_i$			21
29-68	ZE	$[(2Z/bw)_{Eff}]_{1,2}$	4.4.1		21
69-70	DHB	$[2h/\alpha\beta_{bw}]_{1,2}$	4.4.1		21
71-108	UNUSED				
109-128	DEPAVG	$(\partial\epsilon/\partial\alpha)_{J\,AVG}$	4.4.1		21
129-168	SDW	$(\partial\epsilon/\partial\alpha)_{1,2}$	4.4.1		21
169-188	CLANL	$C_{L_{\alpha\,J}}$			21
189-208	M	$(M_J)_H$		Mach number at horizontal tail	21
209	ZWAKEC	$Zw/\bar{c}_r$			21
210-229	ZC	Z_J			21
230	DELQØ	$(\Delta q/q)_{\emptyset}$			21
231	DLE	$\pm\alpha_J - \delta_{LE}$			21
232	DELTAZ	ΔZ_J			21
233	XSUR	X_{Survey}	4.4.1	X at survey plane	21
234	THETA	θ	4.4.1	Shock wave angle, Figure 4.4.1-73	21
235	DELTE	δ_{TE}			21
236	THETE	θ_{TE}			21
237	JDETCH				21

DYNAMIC DERIVATIVE VARIABLES

VARIABLE DEFINITION OF DATA BLOCK "DYN"

LOCATION	VARIABLE NAME	ENGINEERING SYMBOL	DATCOM REFERENCE	COMMENTS/DEFINITIONS	OVERLAY
1	CMQMFB	$(C_{m_q})_{M_{fb}}$	7.1.1.2	Eqn. 7.1.1.2-b	43
2	CMQ2	$(C_{m_q})_{M=.2}$	7.1.1.2	Low speed wing pitching derivative (M=.2)	43
3		UNUSED			
4	CLG	C_{L_g}	7.1.4.1	Figure 7.1.4.1-6	43
5	F8N	$F_8(N)$	7.1.4.2	Figure 7.1.4.2-9	43
6	CMØG	$C_{m_{o_g}}$	7.1.4.1	Figure 7.1.4.1-6	43
7	CMADPP	$C''_{m_{\dot{\alpha}}}$	7.1.4.2	Eqn. 7.1.4.2-b	43
8	F6N	$F_6(N)$	7.1.4.2	Figure 7.1.4.2-9	43
9	EPPBC	E_{β_C}	7.1.1.1	Figure 7.1.1.1-8	43
10	GBC	G_{β_C}	7.1.1.1	Figure 7.1.1.1-8	43
11	CLQPWH	C'_{L_q}	7.1.1.1	Eqn. 7.1.1.1-d	43
12	F3N	$F_3(N)$	7.1.1.1	Figure 7.1.1.1-9	43
13	F4N	$F_4(N)$	7.1.1.1	Figure 7.1.1.1-9	43
14	XACCRB	$X_{ac}/\bar{c}_r$	7.1.1.1	From section 4.1.4.2	43,44, 54
15	CLQWPP	βC_{ℓ_q}	7.1.1.1	Figure 7.1.1.1-10 (a-c)	43
16	CLAD2	$(C_{L_{\dot{\alpha}}})_2$	7.1.4.1	Eqn. 7.1.4.1-c; Figures 7.1.4.1-8(a-f)	44
17	F5N	$F_5(N)$	7.1.4.2	Figure 7.1.1.2-8	43
18	F7N	$F_7(N)$	7.1.4.2	Figure 7.1.1.2-8	43
19	F11N	$F_{11}(N)$	7.1.4.2	Figure 7.1.1.2-8	43
20	CMQPWH	C'_{m_q}	7.1.1.2	C_{m_q} referenced to body axes with the origin at the wing a.c.	43
21		$(dC_m/dC_L)_{M=0}$		Inviscid derivative of C_m due to C_L	43
22	CLAD1	$(C_{L_{\dot{\alpha}}})_1$	7.1.4.1	Eqn. 7.1.4.1-c; Figures 7.1.4.1-8(a-f)	44
23	F1N	$F_1(N)$	7.1.4.1	Figure 7.1.4.1-7	44
24	F2N	$F_2(N)$	7.1.4.1	Figure 7.1.4.1-7	44
25	F3X	$F_3(N)$	7.1.4.1	Figure 7.1.4.1-7	44
26	CMAD1	$(C_{m_{\dot{\alpha}}})_1$	7.1.4.2	Figures 7.1.4.2-13a thru 13p	44
27	CMAD2	$(C_{m_{\dot{\alpha}}})_2$	7.1.4.2		44

VARIABLE DEFINITION OF DATA BLOCK "DYN"

LOCATION	VARIABLE NAME	ENGINEERING SYMBOL	DATCOM REFERENCE	COMMENTS/DEFINITIONS	OVERLAY
28	LAMN	N		Nose taper ratio	46
29	LAMA	A		Afterbody taper ratio	46
30	LAMF	F		Flare section taper ratio	46
31	CNQPN	$(C_{N_q}')_N$	7.2.1.1	Hypersonic nose C_{N_q}	46
32	CNQPA	$(C_{N_q}')_A$	7.2.1.1	Hypersonic afterbody C_{N_q}	46
33	CNQPF	$(C_{N_q}')_F$	7.2.1.1	Hypersonic flare C_{N_q}	46
34	NN		7.2.1.1	Nose distance to moment ref axis	46
35	NA		7.2.1.1	Afterbody distance to moment ref axis	46
36	NF		7.2.1.1	Flare distance to moment ref axis	46
37	CMQPN	$(C_{m_q}')_N$	7.2.1.2	Hypersonic nose C_{m_q}	46
38	CMQPA	$(C_{m_q}')_A$	7.2.1.2	Hypersonic afterbody C_{m_q}	46
39	CMQPF	$(C_{m_q}')_F$	7.2.1.2	Hypersonic flare C_{m_q}	46
40	VB	V_B	7.2.1.2	Body Volume	46
41	CMQN	$(C_{m_q})_N$	7.2.1.2	Eqn. 7.2.1.2-c, nose	46
42	CMQA	$(C_{m_q})_A$	7.2.1.2	Eqn. 7.2.1.2-c, afterbody	46
43	CMQF	$(C_{m_q})_F$	7.2.1.2	Eqn. 7.2.1.2-c, flare	46
44	ALSD	$(\alpha)_{C_L=0}$			45
45	CLACLØ	$(C_{L_\alpha})_{C_L=0}$	7.1.2.2	Obtained from method of 4.1.3.2	45
46	CNPCLM	$(dC_{n_p}/dC_L)_{C_L=0}$	7.1.2.3	Eqn. 7.1.2.3-b	45
47-66	CLA	C_{L_α}		Wing, wing-body lift curve slope	45
67	ZEE	Z	7.1.2.2	Vertical distance between C.G. and wing root chord	45
68	CLPCLP	$(C_{\ell_p})_\Gamma/(C_{\ell_p})_{\Gamma=0}$	7.1.2.2	Dihedral effect, eqn. 7.1.2.2-b	45
69	CLPCL2	$(C_{\ell_p})_{C_{D_L}}/C_L^2$	7.1.2.2	Figure 7.1.2.2-24	45
70	BAØK	$\beta A/K$	7.1.2.2	Figure 7.1.2.2-20	45
71	BCLPCL	$(\beta C_{\ell_p}/K)_{C_L=0}$	7.1.2.2	Figure 7.1.2.2-20	45

VARIABLE DEFINITION OF DATA BLOCK "DYN"

LOCATION	VARIABLE NAME	ENGINEERING SYMBOL	DATCOM REFERENCE	COMMENTS/DEFINITIONS	OVERLAY
72-91	DCLPD	$(\Delta C_{\ell_p})_{DRAG}$	7.1.2.2	Eqn. 7.1.2.2-c	45
92	CNPCLØ	(C_{n_p}/C_L) $C_L=M=0$	7.1.2.3	Eqn. 7.1.2.3-c	45
93	BEE	$[1-M^2\cos^2(\Lambda_{c/4})]^{1/2}$	7.1.2.1	Modified Mach number parameter	45
94	CDO	C_{D_o}		Zero lift drag coefficient	45
95	CNPTHE	$\Delta C_{n_p}/\theta$	7.1.2.3	Figure 7.1.2.3-12	45
96-115	DCLDA	$\partial/\partial\alpha(C_L \tan\alpha)$	7.1.2.1		45
116-135	DCDDA	$\partial/\partial\alpha(C_D-C_{D_o})$	7.1.2.1	Terms of eqn. 7.1.2.1-d	45
136-155	DCADA	$\partial/\partial\alpha(C_L^2/\pi A)$	7.1.2.1		45
156-175	KAY	K	7.1.2.1	Dimensionless correction factor	45
176	CLPG	$(C_{\ell_p})_{\Gamma=C_L=0}$	7.1.2.1	Roll damping without dihedral at zero lift	45
177	DCYPG	$(\Delta C_{Y_P})_\Gamma$	7.1.2.1	Increment in C_{Y_P} due to Γ	45
178	TRANS		7.1.2.1	Intermediate table lookup values	45
179	CHANGE		7.1.2.1	for Figure 7.1.2.1-9	45
180	CYPCLM	$[(C_{Y_P}/C_L)_M$ $C_L=0$	7.1.2.1	Zero lift (dC_{Y_P}/dC_L) at Mach	45
181	TRADE				45
182	CNRCLZ	C_{n_r}/C_L^2	7.1.3.3	Figure 7.1.3.3-6	45
183	CNRCDO	C_{n_r}/C_{D_0}	7.1.3.3	Figure 7.1.3.3-7	45
184-203	CDØØ	C_{D_0}	7.1.3.3	C_{D_0} vs C_L	45
204	TRENS		7.1.2.1	Intermediate table lookup values	45
205	CHENGE		7.1.2.1	for Figure 7.1.2.1-10	45
206	CYPA	C_{Y_P}/α	7.1.2.1	C_{Y_P} as $f(\alpha)$	45
207	CNPTAS	$(C_{n_p}/\alpha)/\tan\Lambda_{LE}$	7.1.2.3	Figure 7.1.2.3-14	45
208	CNPA1	$(C_{n_p}/\alpha)_1$	7.1.2.3	Terms of eqn. 7.1.2.3-f	45
209	CNPA2	$(C_{n_p}/\alpha)_2$	7.1.2.3		45

VARIATION DEFINITION OF DATA BLOCK "DYN"

LOCATION	VARIABLE NAME	ENGINEERING SYMBOL	DATCOM REFERENCE	COMMENTS/DEFINITIONS	OVERLAY
210	CNPA3	$(C_{n_p}/\alpha)_3$	7.1.2.3	Term of eqn. 7.1.2.3-f	45
211	CNPA	(C_{n_p}/α) BODY AXES	7.1.2.3	Result of eqn. 7.1.2.3-f	45
212	CNPAE	(C_{n_p}/α) Total	7.1.2.3	Eqn. 7.1.2.3-e	45
213	CNPBA	(C_{n_p}/α)	7.1.2.3	Result of eqn. 7.1.2.3-g	45

HORIZONTAL TAIL DYNAMIC DERIVATIVE VARIABLES

VARIABLE DEFINITION OF DATA BLOCK "DYNH"

LOCATION	VARIABLE NAME	ENGINEERING SYMBOL	DATCOM REFERENCE	COMMENTS/DEFINITIONS	OVERLAY
1	CMQMFB	$(C_{m_q})_{M_{fb}}$	7.1.1.2	Eqn. 7.1.1.2-b	43
2	CMQ2	$(C_{m_q})_{M=.2}$	7.1.1.2	Low speed H.T. pitching derivative (M=.2)	43
3		UNUSED			
4	CLG	C_{L_g}	7.1.4.1	Figure 7.1.4.1-6	43
5	F8N	$F_8(N)$	7.1.4.2	Figure 7.1.4.2-9	43
6	CMØG	$C_{m_{o_g}}$	7.1.4.1	Figure 7.1.4.1-6	43
7	CMADPP	$C''_{m_{\dot{\alpha}}}$	7.1.4.2	Eqn. 7.1.4.2-b	43
8	F6N	$F_6(N)$	7.1.4.2	Figure 7.1.4.2-9	43
9	EPPBC	$E_{\beta C}$	7.1.1.1	Figure 7.1.1.1-8	43
10	GBC	$G_{\beta C}$	7.1.1.1	Figure 7.1.1.1-8	43
11	CLQPWH	C'_{L_q}	7.1.1.1	Eqn. 7.1.1.1-d	43
12	F3N	$F_3(N)$	7.1.1.1	Figure 7.1.1.1-9	43
13	F4N	$F_4(N)$	7.1.1.1	Figure 7.1.1.1-9	43
14	XACCRB	$X_{ac}/\bar{c}_r$	7.1.1.1	From section 4.1.4.2	43,44, 54
15	CLQWPP	βC_{ℓ_q}	7.1.1.1	Figure 7.1.1.1-10 (a-c)	43
16	CLAD2	$(C_{L_{\dot{\alpha}}})_2$	7.1.4.1	Eqn. 7.1.4.1-c; Figures 7.1.4.1-8(a-f)	44
17	F5N	$F_5(N)$	7.1.4.2	Figure 7.1.1.2-8	43
18	F7N	$F_7(N)$	7.1.4.2	Figure 7.1.1.2-8	43
19	F11N	$F_{11}(N)$	7.1.4.2	Figure 7.1.1.2-8	43
20	CMQPWH	C'_{m_q}	7.1.1.2	C_{m_q} referenced to body axes with the origin at the wing a.c.	43
21		$(dC_m/dC_L)_{M=0}$		Inviscid derivative of C_m due to C_L	43
22	CLAD1	$(C_{L_\alpha})_1$	7.1.4.1	Eqn. 7.1.4.1-c; Figures 7.1.4.1-8(a-f)	44
23	F1N	$F_1(N)$	7.1.4.1	Figure 7.1.4.1-7	44
24	F2N	$F_2(N)$	7.1.4.1	Figure 7.1.4.1-7	44
25	F3X	$F_3(N)$	7.1.4.1	Figure 7.1.4.1-7	44
26	CMAD1	$(C_{m_{\dot{\alpha}}})_1$	7.1.4.2	Figures 7.1.4.2-13a thru 13p	44
27	CMAD2	$(C_{m_{\dot{\alpha}}})_2$	7.1.4.2		44

VARIABLE DEFINITION OF DATA BLOCK "DYNH"

LOCATION	VARIABLE NAME	ENGINEERING SYMBOL	DATCOM REFERENCE	COMMENTS/DEFINITIONS	OVERLAY
28	LAMN	N		Nose taper ratio	46
29	LAMA	A		Afterbody taper ratio	46
30	LAMF	F		Flare section taper ratio	46
31	CNQPN	$(C_{N_q}')_N$	7.2.1.1	Hypersonic nose C_{N_q}	46
32	CNQPA	$(C_{N_q}')_A$	7.2.1.1	Hypersonic afterbody C_{N_q}	46
33	CNQPF	$(C_{N_q}')_F$	7.2.1.1	Hypersonic flare C_{N_q}	46
34	NN		7.2.1.1	Nose distance to moment ref axis	46
35	NA		7.2.1.1	Afterbody distance to moment ref axis	46
36	NF		7.2.1.1	Flare distance to moment ref axis	46
37	CMQPN	$(C_{m_q}')_N$	7.2.1.2	Hypersonic nose C_{m_q}	46
38	CMQPA	$(C_{m_q}')_A$	7.2.1.2	Hypersonic afterbody C_{m_q}	46
39	CMQPF	$(C_{m_q}')_F$	7.2.1.2	Hypersonic flare C_{m_q}	46
40		UNUSED			
41	CMQN	$(C_{m_q})_N$	7.2.1.2	Eqn. 7.2.1.2-c, nose	46
42	CMQA	$(C_{m_q})_A$	7.2.1.2	Eqn. 7.2.1.2-c, afterbody	46
43	CMQF	$(C_{m_q})_F$	7.2.1.2	Eqn. 7.2.1.2-c, flare	46
44	ALSD	$(\alpha)_{C_L=0}$			45
45	CLACLØ	$(C_{L_\alpha})_{C_L=0}$	7.1.2.2	Obtained from method of 4.1.3.2	45
46	CNPCLM	$(dC_{n_p}/dC_L)_{C_L=0}$	7.1.2.3	Eqn. 7.1.2.3-b	45
47-66	CLA	C_{L_α}		H.T., H.T.-body lift curve slope	45
67	ZEE	Z	7.1.2.2	Vertical distance between C.G. and wing root chord	45
68	CLPCLP	$(C_{\ell_p})_\Gamma/(C_{\ell_p})_{\Gamma=0}$	7.1.2.2	Dihedral effect, eqn. 7.1.2.2-b	45
69	CLPCL2	$(C_{\ell_p})_{C_{D_L}}/C_L^2$	7.1.2.2	Figure 7.1.2.2-24	45
70	BAØK	$\beta A/K$	7.1.2.2	Figure 7.1.2.2-20	45
71	BCLPCL	$(\beta C_{\ell_p}/K)_{C_L=0}$	7.1.2.2	Figure 7.1.2.2-20	45

VARIABLE DEFINITION OF DATA BLOCK "DYNH"

LOCATION	VARIABLE NAME	ENGINEERING SYMBOL	DATCOM REFERENCE	COMMENTS/DEFINITIONS	OVERLAY
72-91	DCLPD	$(\Delta C_{\ell_p})_{DRAG}$	7.1.2.2	Eqn. 7.1.2.2-c	45
92	CNPCLØ	(C_{n_p}/C_L) $C_L=M=0$	7.1.2.3	Eqn. 7.1.2.3-c	45
93	BEE	$[1-M^2\cos^2(\Lambda_{c/4})]^{1/2}$	7.1.2.1	Modified mach number parameter	45
94	CDO	C_{D_o}		Zero lift drag coefficient	45
95	CNPTHE	$\Delta C_{n_p}/\theta$	7.1.2.3	Figure 7.1.2.3-12	45
96-115	DCLDA	$\partial/\partial\alpha(C_L \tan\alpha)$	7.1.2.1		45
116-135	DCDDA	$\partial/\partial\alpha(C_D - C_{D_o})$	7.1.2.1	Terms of eqn. 7.1.2.1-d	45
136-155	DCADA	$\partial/\partial\alpha(C_L^2/\pi A)$	7.1.2.1		45
156-175	KAY	K	7.1.2.1	Dimensionless correction factor	45
176	CLPG	$(C_{\ell_p})_{\Gamma=C_{L_0}=}$	7.1.2.1	Roll damping without dihedral at zero lift	45
177	DCYPG	$(\Delta C_{Y_p})_\Gamma$	7.1.2.1	Increment in C_{Y_p} due to Γ	45
178	TRANS		7.1.2.1	Intermediate table lookup values	45
179	CHANGE		7.1.2.1	for Figure 7.1.2.1-9	45
180	CYPCLM	$[(C_{Y_p}/C_L)_M$ $C_L=0$	7.1.2.1	Zero lift (dC_{Y_p}/dC_L) at Mach	45
181	TRADE				45
182	CNRCLZ	C_{n_r}/C_L^2	7.1.3.3	Figure 7.1.3.3-6	45
183	CNRCDO	C_{n_r}/C_{D_0}	7.1.3.3	Figure 7.1.3.3-7	45
184-203	CDØØ	C_{D_0}	7.1.3.3	C_{D_0} vs C_L	45
204	TRENS		7.1.2.1	Intermediate table lookup values	45
205	CHENGE		7.1.2.1	for Figure 7.1.2.1-10	45
206	CYPA	C_{Y_p}/α	7.1.2.1	C_{Y_p} as $f(\alpha)$	45
207	CNPTAS	$(C_{n_p}/\alpha)/\tan\Lambda_{LE}$	7.1.2.3	Figure 7.1.2.3-14	45
208	CNPA1	$(C_{n_p}/\alpha)_1$	7.1.2.3	Terms of eqn. 7.1.2.3-f	45
209	CNPA2	$(C_{n_p}/\alpha)_2$	7.1.2.3		45

VARIABLE DEFINITION OF DATA BLOC "DYNH"

LOCATION	VARIABLE NAME	ENGINEERING SYMBOL	DATCOM REFERENCE	COMMENTS/DEFINITIONS	OVERLAY
210	CNPA3	$(C_{n_p}/\alpha)_3$	7.1.2.3	Term of eqn. 7.1.2.3-f	45
211	CNPA	(C_{n_p}/α) BODY AXES	7.1.2.3	Result of eqn. 7.1.2.3-f	45
212	CNPAE	(C_{n_p}/α) Total	7.1.2.3	Eqn. 7.1.2.3-e	45
213	CNPBA	$(C_{n_p})_{\beta A}$			45

SYMMETRICAL AND JET FLAPS INPUT VARIABLES

VARIABLE DEFINITION OF DATA BLOCK "F"

LOCATION	VARIABLE NAME	ENGINEERING SYMBOL	DATCOM REFERENCE	COMMENTS/DEFINITIONS	OVERLAY
1-10	DELTA	δ_{Flap}		Input via NAMELIST SYMFLP	
11	PHETE	$\tan(\phi'_{TE}/2)$			
12	CHRDFI	C_{f_I}			
13	CHRDFØ	$C_{f_\emptyset}$			
14	SPANFI	b_I			
15	SPANFØ	$b_\emptyset$			
16	NDELTA				
17	FYTPE				
18		UNUSED			
19-28	SCLD	ΔC_ℓ			
29-38	SCMD	ΔC_{m_f}			
39-48	CPRMEI	C'_I			
49-58	CPRMEØ	$C'_\emptyset$			
59	CB	C_b			
60	TC	t/c			
61	PHETEB	$\tan(\phi_{TE}/2)$			
62	NTYPE				
63	CMU	C_μ			
64-73	DELJET	δ_{Jet}			
74	JETFLP				
75-84	EFFJET	$(\delta_{jet})_{Eff}$			
85-94	CAPINB	C'_{a_I}			
95-104	CAPØUT	$C'_{a_\emptyset}$			
105-114	DØBDEF	$(\delta_{Flap})_2$			
115	DØBCIN	$(C_2)_I$			
116	DØBCØT	$(C_2)_\emptyset$			
117	TTYPE				
118	CFITC	$(C_{f_i})_{tc}$			
119	CFOTC	$(C_{fo})_{tc}$			
120	BITC	$(b_i)_{tc}$			
121	BOTC	$(b_o)_{tc}$			

VARIABLE DEFINITION OF DATA BLOCK "F"

LOCATION	VARIABLE NAME	ENGINEERING SYMBOL	DATCOM REFERENCE	COMMENTS/DEFINITIONS	OVERLAY
122	CFITT	$(C_{f_i})_{tt}$		Input via NAMELIST SYMFLP	
123	CFOTT	$(C_{f_o})_{tt}$			
124	BITT	$(b_i)_{tt}$			
125	BOTT	$(b_o)_{tt}$			
126	B1				
127	B2				
128	B3				
129	B4				
130	D1				
131	D2				
132	D3				
133	GCMTC	$(G_{c_{MAX}})_{tc}$			
134	GCMTT	$(G_{c_{MAX}})_{tt}$			
135	KS	k			
136	RL	R_L			
137	BGR	β			
138	DELR	Δr			

ASYMMETRICAL FLAPS

VARIABLE DEFINITION OF DATA BLOCK "F"

LOCATION	VARIABLE NAME	ENGINEERING SYMBOL	DATCOM REFERENCE	COMMENTS/DEFINITIONS	OVERLAY
1-10	DELTAD	$\delta_{d/c}$		Input via NAMELIST ASYFLP	
11	PHETE	$\tan(\phi'_{TE}/2)$			
12	CHRDFI	C_{f_I}			
13	CHRDFØ	$C_{f_\emptyset}$			
14	SPANFI	b_I			
15	SPANFØ	$b_\emptyset$			
16	NDELTA				
17		UNUSED			
18	STYPE				
19-28	DELTAL	δ_L			
29-38	DELTAR	δ_R			
39-48	DELTAS	$\delta_{S/c}$			
49-58	XSØC	$X_{S/c}$			
59	XSPRME	$X'_{S/c}$			
60-69	HSØC	$h_{S/c}$			

TRANSVERSE JET

VARIABLE DEFINITION OF DATA BLOCK "F"

LOCATION	VARIABLE NAME	ENGINEERING SYMBOL	DATCOM REFERENCE	COMMENTS/DEFINITIONS	OVERLAY
1-10	TIME	t		Input via NAMELIST TRNJET	
11	NT				
12-21	FC	F_c			
22-31	ALPHA	α_∞			
32	ME	M_e			
33	ISP	I_{SP}			
34	SPAN	b			
35	PHE	ϕ			
36	GP	γ			
37	CC	C			
38	LFP	L			
39-48	LAMNRJ				

HYPERSONIC FLAP

VARIABLE DEFINITION OF DATA BLOCK "F"

LOCATION	VARIABLE NAME	ENGINEERING SYMBOL	DATCOM REFERENCE	COMMENTS/DEFINITIONS	OVERLAY
1	ALITD	h		Input via NAMELIST HYPEFF	
2	XHL	X_{HL}			
3	TWØTI	T_W/T_∞			
4	CF	C_f			
5-14	HDELTA	δ_f			
15	LAMNR				
16	HNDLTA				

SUBSONIC WING AND HORIZONTAL TAIL PARAMETERS

VARIABLE DEFINITION OF DATA BLOCK "FACT"

LOCATION	VARIABLE NAME	ENGINEERING SYMBOL	DATCOM REFERENCE	COMMENTS/DEFINITIONS	OVERLAY
1		$(b/2-b^*/2)/(b/2)$		Exposed wing to total wing span ratio	7
2-21		$^{I}V_{B(w)}$	4.3.1.3	Vortex interference factor for body vortex on wing panel	7
22-41		$\Gamma/2\pi\alpha Vr$	4.3.1.3	Non-dimensional vortex strength	7
42-61		$^{I}V_{W(H)}$	4.4.1	Vortex interference factor for wing on horizontal tail	10
62-81		a	4.4.1	Eqn. 4.4.1-c,d	9
82-101		b_v	4.4.1	Eqn. 4.4.1-e	9
102-121		ε_e		Canard effective downwash angle	10,28
122-141		$(d\varepsilon/d\alpha)_e$		Canard effective downwash gradient	10,28
142		$(b/2-b^*/2)/(b/2)_{H.T.}$		Exposed H.T. to total H.T. span ratio	7
143-162		$^{I}V_{B(H)}$	4.3.1.3	Vortex interference factor for body vortex on horizontal panel	7
163-182		$(\Gamma/2\pi\alpha Vr)_{H.T.}$	4.3.1.3	Non-dimensional vortex strength of H.T.	7

SUBSONIC HIGH LIFT AND CONTROL PITCHING MOMENT VARIABLES

VARIABLE DEFINITION OF DATA BLOCK "FCM"

LOCATION	VARIABLE NAME	ENGINEERING SYMBOL	DATCOM REFERENCE	COMMENTS/DEFINITIONS	OVERLAY
1	SWEEPB	Λ_B			37
2-5	BØC	$(b/c)_K$			37
6	CAVG	C_{AVG}	6.1.5.1	Average wing chord	37
7-20	ETAK	η_K	6.1.5.1	Spanwise station ratio	37
21-34	CLØALD	$(C_{\ell\Lambda})_K/(\alpha_\delta)_{\delta_{AVG}}$			37
35-48	GDINBD	$(G/\delta)_I$	6.1.5.1	Inboard panel spanwise loading coefficient	37
49-62	GDØUTB	$(G/\delta)_Ø$	6.1.5.1	Outboard panel spanwise loading coefficient	37
63-72	ALPDEL	$(\alpha\delta)_{AVG}$	6.1.5.1	Flap effectiveness derivative average	37
73-86	CK	C_K	6.1.5.1	Actual chord at station K	37
87-100	DELTGD	$(G/\delta)_Ø - (G/\delta)_I$	6.1.5.1	Increment in spanwise loading coefficient	37
101-114	KK	K	6.1.5.1	Figure 6.1.5.1-26A	37
115-128	XLE	$(X_{LE})_K$			37
129-142	CFØC	$(C_{f/c})_K$	6.1.5.1	Flap chord to wing chord ratio at station K	37
143-282	DXCP	ΔX_{CP}			37
283-287	DELCL	ΔC_ℓ			

SUBSONIC HIGH LIFT AND CONTROL HINGE MOMENT VARIABLES

VARIABLE DEFINITION OF DATA BLOCK "FHG"

LOCATION	VARIABLE NAME	ENGINEERING SYMBOL	DATCOM REFERENCE	COMMENTS/DEFINITIONS	OVERLAY
1	CLATHY	$(C_{\ell_\alpha})_{Theory}$	6.1.3.1	From Figure 4.1.1.2-8b	36
2	CHATHY	$(C_{h_\alpha})_{Theory}$	6.1.3.1	Figure 6.1.3.1-11b	36
3	CHACHT	$C_{h_\alpha}/C_{h_\alpha}$	6.1.3.1	Figure 6.1.3.1-7b	36
4		Theory			
4	CHAP	$C_{h'_\alpha}$	6.1.3.1	Eqn. 6.1.3.1-a	36
5	CHAPP	$C_{h''_\alpha}$	6.1.3.1	Eqn. 6.1.3.1-b	36
6	CHAMAC	$(C_{h_\alpha})_M$	6.1.3.1	p. 6.1.3.1-5	36
7	BRATIØ		6.1.3.1	Balance ratio, Eqn. 6.1.3.1-d	36
8	CHBCHA	$\frac{(C_{h_\alpha})_{Balance}}{C_{h_\alpha}}$	6.1.3.1	Figure 6.1.3.1-8	36
9	CHAPPB	$C_{h''_\alpha}$ Balance	6.1.3.1	p. 6.1.3.1-4	36
10	CHDCHT	$C_{h_\delta}/C_{h_\delta}$	6.1.3.2	Figure 6.1.3.2-7B	36
		Theory			
11	CHDTHY	C_{h_δ} Theory	6.1.3.2	Figure 6.1.3.2-7A	36
12	CHDP	$C_{h'_\delta}$	6.1.3.2	Eqn. 6.1.3.2-a	36
13	CHDPP	$C_{h''_\delta}$	6.1.3.2	Eqn. 6.1.3.2-b	36
14	CHDMAC	$(C_{h_\delta})_M$	6.1.3.2	Eqn. 6.1.3.2-e	36
15	CHBCHD	$\frac{(C_{h_\delta})_{Balance}}{C_{h_\delta}}$	6.1.3.2	Figure 6.1.3.2-8	36
16	CHDPPB	$(C_{h''_\delta})_{Balance}$			36
17	DCHAØK	$\frac{\Delta C_{h_\alpha}}{[C_{\ell_\alpha} B_2 K_\alpha \cos \Lambda_{c/4}]}$	6.1.6.1	Figure 6.1.6.1-15A	36
18	CBØCF	C'_b/C'_f			36
19	CFØCAP	C'_f/C'			36
20	B2	B_2	6.1.6.1	Figure 6.1.6.1-16	36
21	KALPHA	K_α	6.1.6.1	Figure 6.1.6.1-15B	36
22	DELCHA	ΔC_{h_α}			36
23	CØSHL	$\cos(\Lambda_{HL})$		Cosine of hinge line sweep	36
24	KDELTA	K_δ	6.1.6.2	Figure 6.1.6.2-9B	36

VARIABLE DEFINITION OF DATA BLOCK "FHG"

LOCATION	VARIABLE NAME	ENGINEERING SYMBOL	DATCOM REFERENCE	COMMENTS/DEFINITIONS	OVERLAY
25	DCHDØK	$\frac{\Delta C_{h_\delta}}{(C_{\ell_\delta} B_2 \; K_\delta \; \cos\Lambda_{c/4} \; \cos \Lambda_{HL})}$	6.1.6.2	Figure 6.1.6.2-9A	36
26-35	DCHD	ΔC_{h_δ}			36

SUBSONIC HIGH LIFT AND CONTROL ASYMMETRICAL DEFLECTION VARIABLES

VARIABLE DEFINITION OF DATA BLOCK "FLA"

LOCATION	VARIABLE NAME	ENGINEERING SYMBOL	DATCOM REFERENCE	COMMENTS/DEFINITIONS	OVERLAY
1	SWEEPB	Λ_β			52
2	BCLØKI	$[\beta C'_{\ell_\delta}/K]_I$	6.2.1.1	Figure 6.2.1.1-23(a-c)	52
3	BCLØKØ	$[\beta C'_{\ell_\delta}/K]_\emptyset$	6.2.1.1	Figure 6.2.1.1-23(a-c)	52
4	BCLDØK	$\beta C'_{\ell_\delta}/K$	6.2.1.1		52
5	CLDPRM	C'_{ℓ_δ}	6.2.1.1	Eqn. 6.2.1.1-a	52
6-15	CLDL	$(C_{\ell_\delta})_L$		Left wing lift effectiveness	52
16-25	CLDR	$(C_{\ell_\delta})_R$		Right wing lift effectiveness	52
26-35	KFACTR	K'	6.2.1.1	Figure 6.1.1.1-40	52
36	SBACKI	Λ_S	6.2.1.1	Spoiler sweep-back	52
37	THETAI	θ_S	6.2.1.1	See sketch (g)	52
38	DELETØ	$(\Delta\ )_\emptyset$	6.2.1.1	Eqn. 6.2.1.1-e, Outboard	52
39	DELETI	$(\Delta\ )_I$	6.2.1.1	Eqn. 6.2.1.1-e, Inboard	52
40	ETAIEFF	η_{IEff}	6.2.1.1	Eqn. 6.2.1.1-d, Inboard	52
41	ETAØEFF	$\eta_{\emptyset Eff}$	6.2.1.1	Eqn. 6.2.1.1-d, Outboard	52
42	BCLDI	$[\beta C'_{\ell_\delta}/K]_I$	6.2.1.1		52
43	BCLDØ	$[\beta C'_{\ell_\delta}/K]_\emptyset$	6.2.1.1		52
44		UNUSED			
45	KYAW	K	6.2.2.1	Figure 6.2.2.1-9	52

FLIGHT CONDITION INPUT VARIABLES

VARIABLE DEFINITION OF DATA BLOCK "FLC"

LOCATION	VARIABLE NAME	ENGINEERING SYMBOL	DATCOM REFERENCE	COMMENTS/DEFINITIONS	OVERLAY
1	NMACH			Input via NAMELIST FLTCØN	
2	NALPHA				
3-22	MACH	M			
23-42	ALSCHD	α			
43-62	RNNUB	$\rho V/\nu$			
63	NGH				
64-73	GRDHT	h			
74-93	PINF	P_∞			
94	STMACH				
95	TSMACH				
96	TR				
97-116	ALT				
117-136	TINF	T_∞			
137-156	VINF	V_∞			
157	WT				
158	GAMMA	γ			
159	NALT				
160	LØØP				

SUBSONIC HIGH LIFT AND CONTROL LIFT COEFFICIENT VARIABLES

VARIABLE DEFINITION OF DATA BLOCK "FLP"

LOCATION	VARIABLE NAME	ENGINEERING SYMBOL	DATCOM REFERENCE	COMMENTS/DEFINITIONS	OVERLAY
1-5	ETA	η_K	6.1.5.1	Dimensionless span station	36
6-10	CHRD	C_K	6.1.5.1	Chord of wing at η_K	36
11-15	CF	C_{f_K}	6.1.5.1	Flap chord at η_K	36
16-19	ALDAVG	$(\alpha_\delta)_{AVG}$	6.1.4.1	Figure 6.1.4.1-8, flap effectiveness derivative	36
20-23	DKB	K_B			36
24-27	SWF	S_{wf}		Wing area affected by flap	36
28-32	CP	C_K'	6.1.5.1	Extended wing chord at station k;C'	36
33	CLØCLT	$C_{\ell_\alpha}/C_{\ell_\alpha}$ THEORY	4.1.1.2	Figure 4.1.1.2-8A	36
34-38	CLDØCT	$[C_{\ell_\delta}/C_{\ell_\delta}$ THEORY$]_K$	6.1.1.1	Figure 6.1.1.1-25B	36
39-43	CLDTHY	(C_{ℓ_δ}) THEORY$_K$	6.1.1.1	Figure 6.1.1.1-25A	36
44-53	DELCL2	$(\Delta C_\ell)_{C_f/c=.2}$	6.1.1.1	Figure 6.1.1.1-31A	36
54-58	DALPDE	$(\Delta\alpha/\delta)_K$	6.1.1.1	Figure 6.1.1.1-32A	36
59	TRANSL			Flag for translating devices	40
60	DELN4	$\Delta n/4$			36
61	CFØCA	$(C_f/C)_{AVG}$		Average flap chord to wing chord ratio	36
62-66	CFØC	$(C_f/C)_K$		Flap chord to wing chord ratio vs η_K	36
67-70	ADCADS	$(\alpha_\delta)_{C_L}$ / $(\alpha_\delta)_{C_\ell}$	6.1.4.1	Figure 6.1.4.1-8	36
71-80	CFACT	$(C'/C-1) \times S_{wf}/S_R$			36
81-90	DSCLMX	$\Delta C_{\ell_{max}}$		Increment is section max lift	36
91-100	RK2	K_2			36
101	RK1	K_1			36
102	DCLMAB	$(\Delta C_{\ell_{max}})$ BASE	6.1.1.3	Figure 6.1.1.3-7	36

VARIABLE DEFINITION OF DATA BLOCK "FLP"

LOCATION	VARIABLE NAME	ENGINEERING SYMBOL	DATCOM REFERENCE	COMMENTS/DEFINITIONS	OVERLAY
103	RK3	K_3			36
104	KSWEEP	K	6.1.4.3	Figure 6.1.4.3-7	36
105-109	ALPHAD	$(\alpha_\delta)_K$	6.1.4.1	Insert of Figure 6.1.4.1-8	36
110-149	DELCLA	$(\Delta C_\ell)_{AVG}$		Average flapped wing lift increment	36
150-189	ALDAG	$(\alpha_\delta)_{AVG}$	6.1.5.1	Average of flap effectiveness derivative	36

GROUND EFFECT VARIABLES

VARIABLE DEFINITION OF DATA BLOCK "GR"

LOCATION	VARIABLE NAME	ENGINEERING SYMBOL	DATCOM REFERENCE	COMMENTS/DEFINITIONS	OVERLAY
1	DX	ΔX			11
2	DXØB2	$\Delta X/(b/2)$			11
3	H75CR	$h_{.75C_R}$	4.7.1	See insert of Figure 4.7.1-19	11
4	HW	h	4.7.1	Figure 4.7.1-19	11
5	HWØB2	$h(b/2)$	4.7.1	Figure 4.7.1-19	11
6	HWCR4	$h_{C_R/4}$	4.7	Height of wing root chord quarter chord above ground	11
7	HWCØCR	$h(C_R/4/C_R)$			11
8	HWMACX	H_{C_L}			11
9	HWMAC4	H	4.7.1	Height of wing quarter chord above ground	11
10	HTMACX	H_{HCL}			11
11	HTMAC4	H_H	4.7.1	Height of HT quarter chord MAC above ground	11
12	R	r	4.7.1	Figure 4.7.1-16	11
13	SIGMA	σ	4.7.1	Prandtl interference coefficient Figure 4.7.1-19	11
14	HWØCBR	$h/\bar{c}_R$			11
15	T	T	4.7.1	Parameter accounting for the reduction of longitudinal velocity; Figure 4.7.1-20	11
16	GRDHT	H_G			11
17-36	DALPHA	$(\Delta\alpha_J)_{G_{WB}}$	4.7.1	Eqn. 4.7.1-a	11
37-56	ALPHWG	$(\alpha_J)_{G_{WB}}$		$(\alpha_J-\Delta\alpha_G)$	11
57	K	K	4.7.1	Parameter accounting for effective wing thickness; Figure 4.7.1-22	11
58	X	X	4.7.1	Figure 4.7.1-14	11
59	BWØB	b_w'/b	4.7.1	Figure 4.7.1-18a	11
60	BEFF	b_{Eff}	4.7.1	Effective wing span; Eqn.4.7.1-c	11
61-80	DDWASH	$(\Delta\varepsilon_J)_G$	4.7.1	Eqn. 4.7.1-b	11
81-100	CLHT	$(C_{L_{HT}})_J$		$[(C_L)_{WBT}-(C_L)_{WB}]$	11
101-120	ALPHAT	$(\alpha_J)_{G_{HT}}$		$[\alpha_J-(\Delta\varepsilon_J)_G]$	11
121-140	BW	B	4.7.1	Figure 4.7.1-21	11

VARIABLE DEFINITION OF DATA BLOCK "GR"

LOCATION	VARIABLE NAME	ENGINEERING SYMBOL	DATCOM REFERENCE	COMMENTS/DEFINITIONS	OVERLAY
141-160	LØLØM1	$L/L_0 - 1$	4.7.1	Parameter accounting for effect of image bound vortex in lift; Figure 4.7.1-15	11
161-180	CLHTG	$(C_{L_{HT_J}})_G$			11
181-200	DCLWBG	$\Delta(C_{L_{WB_J}})_G$		$[(C_{L_{WB}})_G - (C_{L_{WB}})]$	11
201	DXCP	$n - X_{ac}/\bar{c}_R$	4.7.3	see eqn. 4.7.3-c	11
202-221	DCMWBG	$\Delta(C_{m_{WB_J}})_G$		$[(C_{m_{WB}})_G - (C_{m_{WB}})]$	11
222-241	CLØCØS	$\frac{57.3\ C_{L_W}}{2\pi\cos^2\Lambda_{c/4}}$			11
242	LH	ℓ_H	4.7.3	Distance from c.g. to quarter chord MAC of HT	11
243	LHØCBR	$\ell_H/\bar{c}_R$			11
244-263	DCLHTG	$\Delta(C_{L_{HT_J}})_G$		$[(C_{L_{HT}})_G - (C_{L_{HT}})]$	11
264-283	DCMHTG	$\Delta(C_{m_{HT_J}})_G$		Increment in C_m of HT due to ground effects	11
284-303	DCDLWG	$\Delta(C_{D_J})_G$		Increment in C_D due to ground effects	11

SUBSONIC HORIZONTAL TAIL-BODY VARIABLES

VARIABLE DEFINITION OF DATA BLOCK "4B"

LOCATION	VARIABLE NAME	ENGINEERING SYMBOL	DATCOM REFERENCE	COMMENTS/DEFINITIONS	OVERLAY
1		UNUSED			
2		$K_{H(B)}$		Interference factor of HT on body	7
3		$K_{B(H)}$		Interference factor of body on HT	7
4		$(C_{L_\alpha})_{H(B)}$		Lift curve slope of HT in presence of body	7
5		$(C_{L_\alpha})_{B(H)}$		Lift curve slope of body in presence of HT	7
6		$(C_{D_0})_{HB}$		HT-body zero-lift drag	7
7		$k_{H(B)}$			7
8		$k_{B(H)}$			7
9		$(C_{L_i})_{H(B)}$			7
10		$(C_{L_i})_{B(H)}$			7
11		$(C_{L_i})_{HB}$			7
12		$(X_{ac}/\bar{c})_{HB}$			7
13		$(X_{ac}/\bar{c})_{B(H)}$			7,25
14		$(X'_{ac}/c_{r_e})_{B(H)}$			7,25
15		(X'_{ac}/c_{r_e})	A=0		7,25
16		$C_{m_{OHB}}$		HT-body zero-lift pitching moment	7
17		$(C_{D_0})_{WB}$		HT-body zero lift drag coefficient	7
18		R_{WB}			7
19		R_{L_B}			7
20		$(C_{L_{max}})_{WB}$		HT-body maximum lift	7
21		$(\alpha_{C_{L_{max}}})_{WB}$		HT-body angle of attack of max lift	7
22				HB(20)*B(44)	7
23				HB(21)*B(43)	7
24-39		UNUSED			

HORIZONTAL TAIL INPUT VARIABLES

VARIABLE DEFINITION OF DATA BLOCK "HTIN"

LOCATION	VARIABLE NAME	ENGINEERING SYMBOL	DATCOM REFERENCE	COMMENTS/DEFINITIONS	OVERLAY
1	CHRDTP	C_t		Input via NAMELIST HTPLNF	
2	SSPNØP	$b_o^*/2$			
3	SSPNE	$b^*/2$			
4	SSPN	$b/2$			
5	CHRDBP	C_b			
6	CHRDR	C_r			
7	SAVSI	$(\Lambda_{X/C})_I$			
8	SAVSØ	$(\Lambda_{X/C})_Ø$			
9	CHSTAT	X/C			
10		UNUSED			
11	TWISTA	θ			
12	SSPNDD	$(b/2)_{\Gamma_o}$			
13	DHDADI	Γ_I			
14	DHDADØ	$\Gamma_Ø$			
15	TYPE				
16	TØVC	t/c		Input via NAMELIST HTSCHR	
17	DELTAY	ΔY			
18	XØVC	$(X/C)_{max}$			
19	CLI	C_{ℓ_i}			
20	ALPHAI	α_i			
21-40	CLALPA	C_{ℓ_α}			
41-60	CLMAX	$C_{\ell_{max}}$			
61	CMØ	$C_{m_Ø}$			
62	LERI	$(R_{LE})_I$			
63	LERØ	$(R_{LE})_Ø$			
64	CAMBER				
65	TØVCØ	$(t/c)_Ø$			
66	XØVCØ	$(X/C)_{max_o}$			
67	CMØT	$(C_{m_o})_Ø$			
68	CLMAXL	$(C_{\ell_{max}})_{M=0}$			
69	CLAMØ	$(C_{\ell_\alpha})_{M=0}$			

VARIABLE DEFINITION OF DATA BLOCK "HTIN"

LOCATION	VARIABLE NAME	ENGINEERING SYMBOL	DATCOM REFERENCE	COMMENTS/DEFINITIONS	OVERLAY
70	TCEFF	$(t/c)_{Eff}$		Input via NAMELIST HTSCHR	
71	KSHARP	K			
72-91	XAC	X_{ac}			
92		ARCL			
93	YCM	$(Y/C)_{max}$			
94	CLD	$(C_L)_{Design}$ (Transonic)			
95-114	RLPH	ℓ_P			
115-134	SHB	$S_{H(B)}$			
135-154	SEXT	S_{ext}			

HYPERSONIC CONTROL EFFECTIVENESS PARAMETERS

VARIABLE DEFINITION OF DATA BLOCK "HYP"

LOCATION	VARIABLE NAME	ENGINEERING SYMBOL	DATCOM REFERENCE	COMMENTS/DEFINITIONS	OVERLAY
1-20	PAØPI	P_α/P_∞	6.3.1	Local pressure ratio upstream of interaction	42
21-40	TAØTI	T_α/T_∞	6.3.1	Local temperature ratio upstream of interaction	42
41-60	MALP	M_α	6.3.1	Local Mach number upstream of interaction	42
61-80	RAØRI	R_α/R_∞	6.3.1	Local Reynolds number ratio upstream of interaction	42

TRANSVERSE JET CONTROL PARAMETERS

VARIABLE DEFINITION OF DATA BLOCK "JET"

LOCATION	VARIABLE NAME	ENGINEERING SYMBOL	DATCOM REFERENCE	COMMENTS/DEFINITIONS	OVERLAY
1	QINF	q_∞		Free stream dynamic pressure	47
2	CFØ	$C_{f_\emptyset}$			47
3	VEØA	V_E/a			47
4	FJMAX	$(F_{JO})_{max}$			47
5	PJMAX	$(P_{JO})_{max}$			47
6	DT	d_t		Nozzle throat diameter, inches	47
7-16	XCP	X_{CP}			47
17-26	K	K		Amplification factor	47

LOW ASPECT RATIO WING AND WING-BODY PARAMETER

VARIABLE DEFINITION OF DATA BLOCK "LB"

LOCATION	VARIABLE NAME	ENGINEERING SYMBOL	DATCOM REFERENCE	COMMENTS/DEFINITIONS	OVERLAY
1	ALPHA0	α_{N_0}	4.8.1.1	Angle of attack for zero normal force	14
2-21	ALPHAP	α'_J	5.5.2.2	$(\alpha - \alpha_{N_0})$	14
22	KCCA20		5.5.2.2	Eqn. 5.5.2.2-a $[K'_{\ell_\beta}/C'_{N\ CAL}]_{20}$	14
23	DKCKCC		5.5.2.2	Figure 5.5.2.2-13 $\Delta\left[\frac{(K'_{\ell_\beta}/C'_N)_{20}}{(K'_{\ell_\beta}/C'_N)_{Cal}}\right]_{20}$	14
24	KCKCC2		5.5.2.2	Figure 5.5.2.2-12 $\frac{(K'_{\ell_\beta}/C'_N)_{20}}{[(K'_{\ell_\beta}/C'_N)_{Cal}]_{20}}$	14
25	KYCN20		5.5.1.2	Figure 5.5.1.2-8 $[\Delta K_{Y_\beta}/C'^2_N]_{20}$	14
26	KLBCNØ		5.5.2.1	Figure 5.5.2.1-8a $(K_{\ell_{\beta_{N_\emptyset}}}/C'_N)_\Delta$	14
27	DKLCNB		5.5.2.1	Figure 5.5.2.1-8 $\left[\Delta\frac{K'_{\ell_\beta}}{C'_N}\right]_B$	14
28	CNAC0	$(C_{N\alpha_{CAL}})'_{N0}$	5.5.2.2		14
29	CNC20	$(C_{N_{Cal}})'_{20}$	5.5.2.2		14
30	ACNA0		5.5.2.2	$[C'_{N\alpha}/C'_{N\alpha\ Cal}]_{N0}$	14
31	ACNA20		5.5.2.2	$(C_N/C_{N_{Cal}})'_{20}$	14
32	Z	Z			14
33	CN20	$(C'_N)_{20}$			14
34	CNA0	$(C_{N\alpha})_{N0}$			14
35-54	ALPAPR	$(\alpha_i)_J$		Radians	14
55-74	CNP	$(C'_N)_J$		Wing, wing-body C_N referenced to zero normal force reference plane	14
75	SHAPEP			$2S_B/\pi L(HB+BB)$	14
76	CPBØPS			$C_{P_{BN0}}/[C_{P_N}/2\sqrt{\pi S_B}]$	14

VARIABLE DEFINITION OF DATA BLOCK "LB"

LOCATION	VARIABLE NAME	ENGINEERING SYMBOL	DATCOM REFERENCE	COMMENTS/DEFINITIONS	OVERLAY
77	DKLCNØ		5.5.2.1	Figure 5.5.2.1-8a $K'_{\ell_{\beta_{NO}}}/C'^{1}_{N_{\Delta}}$	14
78	KNBNØ	$K'_{n_{\beta_{NO}}}$	5.5.3.1	Eqn. 5.5.3.1-a	14
79	XCPXC		5.5.3.1	Figure 5.5.3.1-6 $(X_{CP})_P/X_{Centroid\ SBS}$	14
80	KYBNØ	$K_{Y_{\beta_{NO}}}$	5.5.1.1	Figure 5.5.1.1-6	14
81		UNUSED			
82	DX			$X_{CG}/C_R - X_{CP}/C_R$	14
83	CPBO	$C_{P_{B_{NO}}}\left(\frac{SB}{SR}\right)$			14
84	RN	$R_f L$			14
85	LØK	L/ROUGFC			14
86	CF	C_f			14
87	CXOP	$(C'_X)_{NO}$			14
88	SFØSR	S_F/S_R			14
89	GEØPAR		5.5.1.2	$\frac{2(A)(S_F)}{S_R}[R_{1/3\ LE}]$	14
90	DCXCXC			$(\Delta C'_X/\Delta C'_{X\ Cal})_{20}$	14
91	ACX			$[.349(\frac{A+2}{A+4})]*LB(90)$	14
92	SHAPEB	$BB^2/(HB\sqrt{S_B})$			14
93	CP20ØØ	$C_{P_{\varepsilon 20}}/C_{P_{B_{NO}}}$			14
94	ACPBO			$C_{P_{B_{NO}}}$(CP20ØØ-1)	14
95-114	CXP	$(C'_X)_J$		Wing, wing-body C_A referenced to zero normal force reference plane	14
115	CMO	C_{m_0}			14
116	XCPØC	X_{CP}/C_R			14
117	BLUNTP			$1-[\frac{4\ \tan\theta D}{A}]$	14
118	XØCRD	(X_{CP}/C_R)			14
119	XØCRB	$\Delta(X_{CP}/C_R)_B$			14
120	XØCRT	$\Delta(X_{CP}/C_R)_t$			14
121-140	CMP	$(C'_m)_J$			

VARIABLE DEFINITION OF DATA BLOCK "LB"

LOCATION	VARIABLE NAME	ENGINEERING SYMBOL	DATCOM REFERENCE	COMMENTS/DEFINITIONS	OVERLAY
141-160	KYB	$(K_{Y_\beta})'_J$	5.5.1.2	Wing, wing-body side force derivative vs α'	14
161-180	KNB	$(K_{n_\beta})'_J$	5.5.3.2	Wing, wing-body yawing moment derivative vs α'	14
181-200	KLB	$(K_{\ell_\beta})'_J$	5.5.2.2	Wing, wing-body rolling moment derivative vs α'	14

LOW ASPECT RATIO WING-BODY INPUTS

VARIABLE DEFINITION OF DATA BLOCK "LBIN"

LOCATION	VARIABLE NAME	ENGINEERING SYMBOL	DATCOM REFERENCE	COMMENTS/DEFINITIONS	OVERLAY
1	ZB	Z_B		input via NAMELIST LARWB	
2	SREF	$S_{Ref}=S_{Plan}$			
3	DELTEP	δ_E			
4	SFRØNT	S_F			
5	AR	A			
6	R3LEØB	$(R_{1/3LE})/b$			
7	DELTAL	δ_L			
8	L	L_B			
9	SWET	S_{Wet}			
10	PERBAS	P			
11	SBASE	S_B			
12	HB	h_B			
13	BB	b_B			
14	BLF				
15	X_{CG}	X_{CG}			
16	THETAD	θ			
17	RØUNDN				
18	SBS	S_{B_S}			
19	SBSLB	$(S_{B_S})_{.2\ell_B}$			
20	XCENSB	$(X_{Centroid})_{S_{B_S}}$			
21	XCENW	$(X_{Centroid})_W$			

REFERENCE DIMENSIONAL DATA

VARIABLE DEFINITION OF DATA BLOCK "OPTN"

LOCATION	VARIABLE NAME	ENGINEERING SYMBOL	DATCOM REFERENCE	COMMENTS/DEFINITIONS	OVERLAY
1	SREF	S_{Ref}		Input via NAMELIST ØPTINS	
2	CBARR	$\bar{c}$			
3	RØUGFC	K			
4	BLREF	b_{Ref}			

VARIABLE DEFINITION OF DATA BLOCK "PW"

LOCATION	VARIABLE NAME	ENGINEERING SYMBOL	DATCOM REFERENCE	COMMENTS/DEFINITIONS	OVERLAY
1-20	DCLT	$(\Delta C_L)_T$	4.6.1	Increment in lift due to thrust, Eqn. 4.6.1-c	13
21	XBARP	$\overline{X}_P$			13
22	DEUDA	$\partial\epsilon_u/\partial\alpha$	4.6.1	Eqn. 4.6.1-m	13
23-42	DCLNP	$(\Delta C_L)_{N_P}$	4.6.1	Eqn. 4.6.1-i	13
43-62	DCLQ	$(\Delta C_L)_q$	4.6.1	Eqn. 4.6.1-t	13
63-82	DCLAW	$(\Delta C_L)_{\Delta\alpha_W}$	4.6.1	Eqn. 4.6.1-s	13
83-102	DCLHQ	$(\Delta C_{L_H})_q$			13
103-122	DCMNP	$(\Delta C_m)_{N_P}$	4.6.3	Eqn. 4.6.3-b	13
123	DCMQ	$(\Delta C_m)_q$	4.6.3	Eqn. 4.6.3-j	13
124-143	DCML	$(\Delta C_m)_L$	4.6.3	Eqn. 4.6.3-e	13
144-163	DCMHQ	$(\Delta C_{m_H})_q$	4.6.3	Eqn. 4.6.3-j	13
164-183	DCMHE	$(\Delta C_{m_H})_\epsilon$	4.6.3	Eqn. 4.6.3-l	13
184	SINAPX				13
185	PRPRD2	R_P^2	4.6.1	Square of propeller radius	13
186	CTI	C_{T_i}			13
187	BSTIØ2	$b_i^*/2$	4.6.1	Eqn. 4.6.1-o	13
188	SSTRI	S_i^*	4.6.1	Eqn. 4.6.1-p	13
189	BSTØ12	$b_{\ddot{\phi}_i}^*/2$	4.6.1	Eqn. 4.6.1-o	13
190	CTIH	$C_{T_{iH}}$			13
191	SSTØI	$S_{\ddot{\phi}_i}^*$	4.6.1	Eqn. 4.6.1-p	13
192	SRATIØ	S_{i_W}/S_{r_W}	4.6.1	See eqn. 4.6.1-s	13
193	CNAP80	$[(C_{N_\alpha})_P]$ KN=80.7	4.6.1	Figure 4.6.1-25a	13
194	CNAP	$(C_{N_\alpha})_P$	4.6.1	Eqn. 4.6.1-e	13
195	C1	C_1	4.6.1	Figure 4.6.1-26	13
196	C2	C_2	4.6.1	Figure 4.6.1-26	13
197	DEPDAP	$\partial\epsilon_P/\partial\alpha_P$	4.6.1	Eqn. 4.6.1-j	13
198	SRTPCØ	$S_r T_c'/\pi R_P^2$	4.6.1	Eqn. 4.6.1-r	13
199	F	f	4.6.1	Propeller inflow factor	13
200	CØMBØI		4.6.4	$n_E F (C_{N_\alpha}) \frac{\alpha_P}{57.3} \left(\frac{\pi R_P^2}{S_r}\right) \cos \alpha_T$	13

POWER EFFECT VARIABLES: PROPELLER POWER

VARIABLE DEFINITION OF DATA BLOCK "PW"

LOCATION	VARIABLE NAME	ENGINEERING SYMBOL	DATCOM REFERENCE	COMMENTS/DEFINITIONS	OVERLAY
201	CØMBØ				13
202	CØSAIH	$\cos \alpha_{iH}$			13
203	SIØSRH	S_{iH}/S_{rH}			13
204	SIH	$(S_i)_H$			13
205	DCDØS	$(\Delta C_{D0})_S$	4.6.4	Eqn. 4.6.4-a,b	13
206	CDØPØW	$(C_{D0})_{Power\ on}$	4.6.4	Eqn. 4.6.4-d	13
207	RPNØB				13
208	AAK	k			13
209	EBRØEP	$\bar{\epsilon}/\epsilon_p$	4.6.4	See Eqn. 4.6.4-i	13
210	DCMT	$(\Delta C_m)_T$	4.6.3	Eqn. 4.6.3-a	13
211	ASTARI	A_i^*			13
212	TRPSTI	λ_i^*			13
213	XBRSRR	$\bar{X}_r^*$			13
214	ALPHAT	α_T	4.6.4	p. 4.6.4-3	13
215	ALPHAP	α_p	4.6.4	p. 4.6.4-4	13
216	EP	ϵ_p	4.6.4		13
217	SINAP	$\sin \alpha_p$			13
218	ZS	Z_S			13
219	BIØ2	$b_i/2$			13
220	CØSAT	$\cos \alpha_T$			13
221	SINAT	$\sin \alpha_T$			13
222	SI	S_i			13
223	TRI	λ_i			13
224	CBARLI	$\bar{c}_{l_i}$			13
225	SWEEPA	$\Lambda_{25/i}^*$			13
226	TRPSI	$\dot{i}$			13
227	SCAPI	S_l			13
228	TRSØI	$\lambda_{o_i}^*$			13
229	CBSRØI	$\bar{c}_{o_i}^*$			13
230	CØSSWA	$\cos \Lambda_i$			13

POWER EFFECT VARIABLES: PROPELLER POWER

VARIABLE DEFINITION OF DATA BLOCK "PW"

LOCATION	VARIABLE NAME	ENGINEERING SYMBOL	DATCOM REFERENCE	COMMENTS/DEFINITIONS	OVERLAY
231	ATØVCA				13
232	CMØ1N				13
233	CMØ2				13
234	CMOØVA				13
235	CMOTEØ				13
236	CMO1				13
237	BS1				13
238	BS2				13
239	BS3				13
240	AK1	K_1		Nacelle or fuselage empirical factor	13
241	DELALP	$\Delta\alpha$			13
242	DXHMAC	$\Delta X_{H_{mac}}$			13
243	ZHEFF	$Z_{H_{Eff}}$		Vertical distance from HT mac quarter chord to the slipstream center line	13
244	ZHØRP	$Z_{H_{Eff}}/R_P$			13
245	DQHØQ1	$\Delta q_H/q_\infty$			13
246	ZHT	Z_{H_T}		Vertical distance from the propeller thrust axes to HT mac quarter chord	13
247	ZHTØRP	Z_{H_T}/R_P			13
248	XCP	X_{CP}			13
249	DLH	$\Delta\ell_H$			13
250	CNP	C_{N_P}		Propeller normal force coefficient	13
251	CLP	C_{L_P}		Propeller lift coefficient	13
252	EBAR	$\bar{\epsilon}$		Effective downwash over wing span	13
253	CLWW	C_{L_W}			13
254	CDLRAT	$\frac{(C_{D_L})_{Power\ on}}{(C_{D_L})_{Power\ off}}$		Power on to power off C_{D_L} ratio	13

POWER EFFECT VARIABLES: PROPELLER POWER

VARIABLE DEFINITION OF DATA BLOCK "PW"

LOCATION	VARIABLE NAME	ENGINEERING SYMBOL	DATCOM REFERENCE	COMMENTS/DEFINITIONS	OVERLAY
255	CDLPØW	$(C_{D_L})_{Power\ on}$			13
256	EPØWR	$\epsilon_{Power\ on}$		Power on downwash angle	13
257	YTEMP				13
258	STEP1				13
259-278	DCLHE	$(\Delta C_{L_H})_{\epsilon}$			13
279-285	ARGCS				

POWER EFFECT VARIABLES. JET POWER

VARIABLE DEFINITION OF DATA BLOCK "PW"

LOCATION	VARIABLE NAME	ENGINEERING SYMBOL	DATCOM REFERENCE	COMMENTS/DEFINITIONS	OVERLAY
1	ATP	α_T'			30
2-21	CDLT	$(\Delta C_L)_T$	4.6.1	Eqn. 4.6.1-c (vs α_T)	30
22	XBARIN	$\bar{X}_{IN}$			30
23	XINØCR	$\bar{X}_{IN}/\bar{c}_r$			30
24	DEUDA	$\partial\varepsilon_u/\partial\alpha$	4.4.1	Eqn. 4.6.1-m	30
25	EPSLØN	ε			30
26	ATJ	$(\alpha_T)_J$	4.6.1	Eqn. 4.6.1-a	30
27-46	DCLNJ	$(\Delta C_L)_{N_J}$	4.6.1	Eqn. 4.6.1-y	30
47	XEP	X_e'		Longitudinal distance from HT mac quarter chord to jet exit	30
48	ZJP	Z_J'		Vertical distance from jet exhaust axes to HT mac quarter chord	30
49	XJP	X_J'		Longitudinal distance from jet wake origin to jet exit	30
50	XHP	X_H'		Longitudinal distance from HT mac quarter chord to jet wake origin	30
51	AIN	a_∞		Free stream speed of sound	30
52	VIN	V_∞		Free stream speed	30
53	TINØTJ	T_∞/T_J			30
54	VJPØVI	V_J'/V_∞	4.6.1	Figure 4.6.1-29	30
55	ZJPØRJ	Z_J'/R_J	4.6.1	Figure 4.6.1-30(a-c)	30
56	DE	$\Delta\varepsilon$		Downwash increment	30
57	ZJPØBH	Z_J'/b_H			30
58	YTØB2H	$Y_T/(b/2)_H$			30
59	DEBØDE	$\Delta\bar{\varepsilon}/\Delta\varepsilon$	4.6.1	Figure 4.6.1-28	30
60	ZJPXHP	Z_J'/X_H'			30
61	SRTPCØ	$S_r T_c'/(X_H')^2$			30
62	ZJDEXH	$Z_J'\Delta\varepsilon/X_H'$			30
63	CØMP1				30
64	PTEØP1	P_{T_e}/P_∞			30
65	RJPØRJ	R_J'/R_J	4.6.1	Figure 4.6.1-32a	30

POWER EFFECT VARIABLES: JET POWER

VARIABLE DEFINITION OF DATA BLOCK "PW"

LOCATION	VARIABLE NAME	ENGINEERING SYMBOL	DATCOM REFERENCE	COMMENTS/DEFINITIONS	OVERLAY
66	RJP	R_J'		Radius of equivalent jet orifice	30
67	DXPØRJ	$\Delta X'/R_J$	4.6.1	Figure 4.6.1-32b	30
68	DXP	$\Delta X'$			30
69	XEPC	X_E'			30
70	XHPC	X_H'			30
71	ZTP	Z_T'			30
72	ZJPRJP	Z_J'/R_J'			30
73-92	DCLHE	$(\Delta C_{L_H})_\varepsilon$			30
93	ZBART	$\overline{Z}_T$			30
94-113	DCMT	$(\Delta C_m)_T$	4.6.3	Eqn. 4.6.3-a	30
114	XL	X_L			30
115-134	DCMNJ	$(\Delta C_m)_{N_J}$	4.6.3	Eqn. 4.6.3-n	30
135	DLH	$\Delta \ell_H$			30
136-155	DCME	$(\Delta C_m)_e$	4.6.3	Eqn. 4.6.3-o	30

PROPELLER AND JET POWER INPUTS

VARIABLE DEFINITION OF DATA BLOCK "PWIN"

LOCATION	VARIABLE NAME	ENGINEERING SYMBOL	DATCOM REFERENCE	COMMENTS/DEFINITIONS	OVERLAY
1	AIETLP	α_{iT}		Input via NAMELIST PRØPWR	
2	NENGSP	n_E			
3	THSTCP	T_c'			
4	PHALØC	X_P'			
5	PHVLØC	Z_T			
6	PRPRAD	R_P			
7	ENGICT	K_N			
8	BWAPR3	$(b_P)_{0.3\ R_P}$			
9	BWAPR6	$(b_P)_{0.6\ R_P}$			
10	BWAPR9	$(b_P)_{0.9\ R_P}$			
11	NØPBFE	N_B			
12	BAPR75	$(\beta_P)_{0.75R_P}$			
13	AIETLJ	α_{iT}		Input via NAMELIST JETPWR	
14	NENGSJ	n_E			
15	THSTCJ	T_c'			
16	JIALØC	X_{IN}			
17	JEVLØC	Z_e			
18	JEALØC	X_e			
19	JINLTA	A_{IN}			
20	JEANGL	θ_J			
21	JEVELØ	V_J			
22	AMBTMP	T_∞			
23	JESTMP	T_J			
24	JELLØC	Y_T			
25	JETØTP	P_{T_e}			
26	AMBSTP	P_∞			
27	JERAD	R_J			
28	YP	Y_P		Input via NAMELIST PRØPWR	
29	CRØT				

SUPERSONIC BODY VARIABLES

VARIABLE DEFINITION OF DATA BLOCK "SBD"

LOCATION	VARIABLE NAME	ENGINEERING SYMBOL	DATCOM REFERENCE	COMMENTS/DEFINITIONS	OVERLAY
1	RLBP	ℓ_B'			19,26
2	RLB	ℓ_B			19,26
3	RLBT	ℓ_{BT}			19,26
4	DN	d_n			19,26
5	D1	d_1	4.2.1.1	p. 4.2.1.1-4	19,26
6	D2	d_2	4.2.1.1	p. 4.2.1.1-4	19,26
7	BETA	β		Mach number parameter	19
8	FA	f_A		Afterbody fineness ratio	19
9	FB	f_B		Body fineness ratio	19
10	FN	f_N		Nose fineness ratio	19,26
11	XCPLB	X_{CP}/ℓ_B'	4.2.2.1	Figure 4.2.2.1-24	19
12	CMAØC	$(C_{m_\alpha})_{OC-C}$	4.2.2.1	Eqn. 4.2.2.1-d	19
13	DELCMA	ΔC_{m_α}			19
14	THETAB	$\theta_{Boattail}$			19
15	DELCNA	ΔC_{N_α}			19
16	THETAF	θ_{Flare}	4.2.1.1	p. 4.2.1.1-4	19
17	CNAØC	$(C_{N_\alpha})_{OC-C}$			19
18	CNA	C_{N_α}		Body normal force slope, per deg	19,26
19	SB	S_b		Body base area	19
20	SP	S_p		Body planform area	19
21-40	ALSCHR	α_J			19
41-60	MC	M_{C_J}		M sin α	19
61-80	CDC	$C_{d_{c_J}}$	4.2.1.2		19
81-100	CFLØW	$\frac{C_{d_c} S_p \sin^2\alpha}{S_r}$	4.2.1.2	Cross flow lift term; eqn. 4.2.1.2-c	19
101	XCPBLB	X_{CP}/ℓ_{B_T}	4.2.2.1	Figure 4.2.2.1-24	19
102	THETAF	θ_f			19
103	CMAP	$C_{m_\alpha'}$			19
104		UNUSED			
105	XC	X_c		Centroid of planform area	19
106	VB	V_B		Body volume	19

VARIABLE DEFINITION OF DATA BLOCK "SBD"

LOCATION	VARIABLE NAME	ENGINEERING SYMBOL	DATCOM REFERENCE	COMMENTS/DEFINITIONS	OVERLAY
107	CDN2P	$(C_{D_{N_2}})$ or (C_{D_A})			19
108	CDN2	$C_{D_{N_2}}$			19
109		UNUSED			
110	CMA	C_{m_α}		Body pitching moment slope	19,26
111	SS	S_S		Body wetted area	19,26
112	RNB	R_{ℓ_B}			19
113	RLCØFF	R_{ℓ_C}			19,26
114	CF	C_f		Body skin friction coefficient	19
115	CDF	C_{d_f}		Body skin friction drag coefficient	19,26
116	CDANF	$C_{D_{A_{NC}}} \frac{2\ell_A^2}{b}$			19
117	CDANC	$C_{D_{A_{NC}}}$			19
118	CDAB				19
119	CDA	C_{D_A}			19
120	DMAX	d_{max}			19
121	CDD				19
122	CPB	C_{P_b}			19
123	CDB	C_{D_b}			19
124	CDØ	C_{D_0}		Body zero lift drag coefficient	19,26
125	CNANF				26
126	XCPLN	X_{CP}/ℓ_B	4.2.2.1	Figure 4.2.2.1-24	26
127	THETAN	θ_N			26
128	CNAN	$(C_{N_\alpha})_N$		Nose normal force slope	26
129	CMAN	$(C_{m_\alpha})_N$		Nose pitching moment slope	26
130	THETAA	θ_A			26
131	CNAAF				26
132	CMAAF				26
133	CNAA	$(C_{N_\alpha})_A$		Afterbody normal force slope	26
134	CMAA	$(C_{m_\alpha})_A$		Afterbody pitching moment slope	26
135	THETAT	θ_B			26
136	CNATF				26

VARIABLE DEFINITION OF DATA BLOCK "SBD"

LOCATION	VARIABLE NAME	ENGINEERING SYMBOL	DATCOM REFERENCE	COMMENTS/DEFINITIONS	OVERLAY
137	CMATF				26
138	CNAT	$(C_{N_\alpha})_B$		Body normal force slope	26
139	CMAT	$(C_{m_\alpha})_B$		Body pitching moment slope	26
140	K	K	4.2.1.2	Eqn. 4.2.1.2-j	26
141-160	THETA	θ_N			26
161-180	LX	$(\ell_X)_N$			26
181-200	INTGCN			$\int_0^1 (K_{\theta J})_N r_N d(\frac{X_N}{\ell_B})$	26
201-220	INTGCM			$\int_0^1 (K_{\theta J})_N r_N (\ell_X)_N d(\frac{X_N}{\ell_B})$	26
221	RNN	R_N			26
222	CFINC	$C_{f\ inc}$			26
223	CFCØCF	C_{f_c}/C_f			26
224	CDPN	$(C_{D_P})_N$			26
225	CDPA	$(C_{D_P})_A$			26
226	CDPT	$(C_{D_P})_B$			26
227	CDP	C_{D_P}			26
228		$(C_{N_{\alpha N}})_{WB}$			19,26
229		$(C_{N_{\alpha N}})_{HB}$			19,26

SECOND LEVEL METHOD DATA PARAMETERS

VARIABLE DEFINITION OF DATA BLOCK "SECD"

LOCATION	VARIABLE NAME	ENGINEERING SYMBOL	DATCOM REFERENCE	COMMENTS/DEFINITIONS	OVERLAY
1		$(C_{\ell_\beta}/C_L)_W$ M=.6	5.1.2.1		35
2		$(C_{\ell_\beta}/C_L)_W$ M=1.4	5.1.2.1		35
3		$(C_{\ell_\beta}/C_L)_H$ M=.6	5.1.2.1		35
4		$(C_{\ell_\beta}/C_L)_H$ M=1.4	5.1.2.1		35
5		$(C_{\ell_\beta}/C_L)_{WB}$ M=M_{fb}	5.2.2.1		35
6		$(C_{\ell_\beta}/C_L)_{WB}$ M=1.4	5.2.2.1		35
7		$(C_{\ell_\beta}/C_L)_{HB}$ M=M_{fb}	5.2.2.1		35
8		$(C_{\ell_\beta}/C_L)_{HB}$ M=1.4	5.2.2.1		35
9		$(C_{N_\alpha})_{WB}$ M=1.4	4.1.3.2		35
10		$(C_{N_\alpha})_{HB}$ M=1.4	4.1.3.2		35
11		$(C_{D_0})_{WBT}$ M=.6	4.5.3.1		35
12		$(C_{D_0})_{WBT}$ M=.7	4.5.3.1		.35
13		$(C_{D_0})_{WBT}$ M=1.1	4.5.3.1		35
14		$(C_{D_0})_{WBT}$ M=1.4	4.5.3.1		35
15	DØNE			Flag if methods complete	35
16	DØL2			Flag if methods applicable	35
17		$(C_{D_L}/C_L^2)_W$	4.1.5.2		35
18		$(C_{\ell_\beta}/C_L)_W$	5.1.2.1	Eqn. 5.1.2.1-c	35
19		$(C_{D_L}/C_L^2)_H$	4.1.5.2		35
20		$(C_{\ell_\beta}/C_L)_H$	5.1.2.1	Eqn. 5.1.2.1-c	35

VARIABLE DEFINITION OF DATA BLOCK "SECD"

LOCATION	VARIABLE NAME	ENGINEERING SYMBOL	DATCOM REFERENCE	COMMENTS/DEFINITIONS	OVERLAY
21		$(C_{\ell_\beta}/C_L)_{WB}$	5.2.2.1	Eqn. 5.2.2.1-d	35
22		$(C_{\ell_\beta}/C_L)_{HB}$	5.2.2.1	Eqn. 5.2.2.1-d	35
23		$(M_D)_{BWHV}$	4.5.3.1	Drag divergence Mach number	35

SUPERSONIC HORIZONTAL TAIL-BODY VARIABLES

VARIABLE DEFINITION OF DATA BLOCK "SHB"

LOCATION	VARIABLE NAME	ENGINEERING SYMBOL	DATCOM REFERENCE	COMMENTS/DEFINITIONS	OVERLAY
1		UNUSED			
2	KKWB	k_{HB}			20
3	XACN	$(X_{ac})_N$			20
4	CDØWB	$(C_{D_0})_{HB}$		HT-body zero lift drag coefficient	20
5	DD	d_{Body}			20,25
6	BETA	β		Mach number parameter	20
7	CLABW	$(C_{L_\alpha})_{B(H)}$			20
8	XACBW	$(X_{ac}/\bar{c}_r)_{B(H)}$			20,25
9	FA	f_a			20
10	CLI	$C_{\ell_{\alpha_I}}$			20
11	KBW	$K_{B(H)}$			20,25
12-31	IVBW	$^{I}V_{B(H)_J}$			20
32	RKBW		4.3.1.2	Figure 4.3.1.2-11	20,25
33	CLAWB	$(C_{L_\alpha})_{H(B)}$			20
34	FN	f_N			20
35	KWB	$K_{H(B)}$			20,25
36	XAC	X_{ac}/c_r			20
37	KKBW	$k_{B(H)}$			20
38	RLAP	ℓ'_a			20
39	XACA		4.3.2.1	Figure 4.3.2.1-37	20,25
40-59	GAMMA	$\Gamma/2\pi\alpha v(r)$ cre/2			20
60	TRINØ				20,25
61	XCPLN	$(X_{CP}/C_r)_N$			20

SUPERSONIC PANEL SIDESLIP VARIABLES

VARIABLE DEFINITION OF DATA BLOCK "SLA"

LOCATION	VARIABLE NAME	ENGINEERING SYMBOL	DATCOM REFERENCE	COMMENTS/DEFINITIONS	OVERLAY
1	MACH	M		Mach number	23,32
2	BETA	β		Mach number parameter	23,32
3	X	X			23
4	DIHEQ	$\Gamma_{Equiv.}$		Equivalent dihedral angle	23
5	QBC	$1/Q_{(\beta C)}$	5.1.1.1	Figure 5.1.1.1-6	23
6	EBC	$E''_{(\beta C)}$	7.1.1.1	Figure 7.1.1.1-8	23
7	CLPTØA	$(C_{\ell_p})_{Theo/A}$	7.1.2.2	Figure 7.1.2.2-25	23
8	CLP	C_{ℓ_p}			23
9	CLBD	$(C_{\ell_\beta})_\Gamma$			23
10	ZW	Z_w			23
11	RKI	K_i	5.2.1.1	Figure 5.2.1.1-7	23
12	RNN	R_ℓ			23
13	RKRL	K_{R_ℓ}	5.2.3.1	Figure 5.2.3.1-9	23
14	RH1	h_1			23
15	RH2	h_2			23
16	SBS	S_{B_S}		Projected side area of body	23
17	RKN	K_N	5.2.3.1	Figure 5.2.3.1-8	23
18	ZWP	Z'_w			23
19	CLBZW	$(\Delta C_{\ell_\beta})_{Z_w}$			23
20	DCLB	ΔC_{ℓ_β}			23
21	RKHBHL	$(K_{H(B)})_{HL}$	5.3.1.1	Figure 5.3.1.1-25 (ØØ)	23
22	RKHB	$K_{H(B)}$			23
23	DCYHWB	$(\Delta C_{Y_\beta})_{H(WB)}$			23
24	RKVWB	$K_{v(WB)}$	5.3.1.1	Figure 5.3.1.1-25 (B-P)	23
25	RKVB	$K_{v(B)}$	5.3.1.1	Figure 5.3.1.1-25A	23
26	RKPVWB	$K'_{v_{W(B)}}$			23
27	DCYBV	$(\Delta C_{Y_\beta})_{V(WB)}$			23
28	RKVHB	$K_{v(HB)}$	5.3.1.1	Figure 5.3.1.1-25 (B-P)	23
29	ZP	Z_P			23
30	RLP	ℓ_P			23
31	CNAV	$(C_{N_\alpha})_v$			32

SUPERSONIC HORIZONTAL TAIL PANEL SIDESLIP VARIABLES

VARIABLE DEFINITION OF DATA BLOCK "SLAH"

LOCATION	VARIABLE NAME	ENGINEERING SYMBOL	DATCOM REFERENCE	COMMENTS/DEFINITIONS	OVERLAY
1	MACH	M		Mach number	23,32
2	BETA	β		Mach number parameter	23,32
3	X	X			23
4	DIHEQ	$\Gamma_{Equiv.}$		Equivalent dihedral angle	23
5	QBC	$1/Q_{(\beta C)}$	5.1.1.1	Figure 5.1.1.1-6	23
6	EBC	$E''_{(\beta C)}$	7.1.1.1	Figure 7.1.1.1-8	23
7	CLPTØA	$(C_{\ell_p})_{Theo/A}$	7.1.2.2	Figure 7.1.2.2-25	23
8	CLP	C_{ℓ_p}			23
9	CLBD	$(C_{\ell_\beta})_\Gamma$			23
10	ZW	Z_w			23
11	RKI	K_i	5.2.1.1	Figure 5.2.1.1-7	23
12	RNN	R_ℓ			23
13	RKRL	K_{R_ℓ}	5.2.3.1	Figure 5.2.3.1-9	23
14	RH1	h_1			23
15	RH2	h_2			23
16	SBS	S_{B_S}		Projected side area of body	23
17	RKN	K_N	5.2.3.1	Figure 5.2.3.1-8	23
18	ZWP	Z'_w			23
19	CLBZW	$(\Delta C_{\ell_\beta})_{Z_w}$			23
20	DCLB	ΔC_{ℓ_β}			23
21-31		UNUSED			

SUPERSONIC WING VARIABLES

VARIABLE DEFINITION OF DATA BLOCK "SLG"

LOCATION	VARIABLE NAME	ENGINEERING SYMBOL	DATCOM REFERENCE	COMMENTS/DEFINITIONS	OVERLAY
1	BETA	β		Mach number parameter	18,27
2	BOVERT	$\beta/\tan\Lambda_{LE}$	4.1.3.2		18,27
3	CNHNT	$C_{N_\alpha}/(C_{N_\alpha})_{Theory}$	4.1.3.2		27
4	BCNA	βC_{N_α}	4.1.3.2		27
5	CNTHRY	$(C_{N_\alpha})_{Theory}$	4.1.3.2		27
6	CNAA	C_{N_α}/A	4.1.3.2		27
7	CNA1	C_{N_α}	4.1.3.2	Wing normal force slope, per radian	27
8	DELTYT	$\Delta Y_\perp$	4.1.3.2		27
9	DELTDT	$\delta_\perp$	4.1.3.2	Semi-wedge angle measured perpendicular to wing LE	27
10	TLE192	$\tan\Lambda_{LE}/1.92$			27
11	E	E			27
12	CC	C			27
13-32	CNAAA	$(C_{N_{\alpha\alpha}})_J$	4.1.3.3		27
33-52	ALPHAJ	α_J			27
53-72	CDL	$(C_{D_L})_J$			27
73	A2	A_2	4.1.3.2		27
74	S2	S_2	4.1.3.2		27
75	CNAAAP	$C_{N'_{\alpha\alpha}}$	4.1.3.3		27
76	XACCRI	$(X_{ac}/C_r)_I$		Inboard panel	27
77	CNTBW	$(C_{N_\alpha})_{BW\ Theory}$			27
78	XACCRØ	$(X_{ac}/c_r)_Ø$		Outboard panel	27
79	CDW	C_{D_W}			18
80	$C_{DØ}$	C_{D_0}		Wing zero lift drag coefficient	18
81	DRAGC	$\pi A \frac{C_{D_L}}{C_L^2}\left[\frac{P}{P+1}\right]$			18
82	P	P			18
83	CFØ	$C_{f_Ø}$		Outboard panel	18
84	CFI	C_{f_I}		Inboard panel	18

VARIABLE DEFINITION OF DATA BLOCK "SLG"

LOCATION	VARIABLE NAME	ENGINEERING SYMBOL	DATCOM REFERENCE	COMMENTS/DEFINITIONS	OVERLAY
85	RNØ	$R_{C_\emptyset}$		Outboard panel	18
86	RNI	R_{C_1}		Inboard panel	18
87	CDF	C_{D_f}			18
88	CF	C_f			18
89	RLCØFF	R_{ℓ_c}			18
90	RNN	R_ℓ			18
91	CNAØ	$(C_{N_\alpha})_\emptyset$		Outboard panel	27
92	CNAI	$(C_{N_\alpha})_1$		Inboard panel	27
93	RMACH	$(M_\perp)_{\alpha=0}$			27
94	DETACH				27
95-114		UNUSED			
115	DETANG	α^*			27
116	CNAAST	$C^*_{N\alpha\alpha}$	4.1.3.3		27
117	DETALP	$\Delta\alpha$			27
118	CRBW	$(C_r)_{BW}$			27
119	SBW	S_{BW}			27
120	ARBW	A_{BW}			27
121	TAPBW	λ_{BW}			27
122	CLEBW	$(C_{LE})_{BW}$			27
123	CRGLV	$(C_r)_g$		Glove component	27
124	SGLV	S_g	4.1.3.2	Glove component	27
125	ARGLV	A_g	4.1.3.2	Glove component	27
126	BE	b_E	4.1.3.2	Extension component	27
127	CN1	$(C_{N_\alpha}/A)_1$	4.1.3.2		27
128	CN2	$(C_{N_\alpha}/A)_2$	4.1.3.2		27
129	CNAE	$(C_{N_\alpha})_E$	4.1.3.2	Extension component	27
130	CNAGLV	$(C_{N_\alpha})_g$	4.1.3.2	Glove component	27
131	CNABW	$(C_{N_\alpha})_{BW}$	4.1.3.2		27
132	CLEGLV	$(C_{LE})_g$	4.1.3.2	Glove component	27
133	RKL	K_L			27
134	XACCR	$X_{ac}/\bar{c}$			20,27

VARIABLE DEFINITION OF DATA BLOCK "SLG"

LOCATION	VARIABLE NAME	ENGINEERING SYMBOL	DATCOM REFERENCE	COMMENTS/DEFINITIONS	OVERLAY
135	DCMCL	dC_m/dC_N			27
136	CMA	C_{M_α}			27
137	CNCNTI	$[C_{N_\alpha}/C_{N_\alpha}]_{THEO}$ I		Inboard panel	27
138	CNCNTØ	$[C_{N_\alpha}/C_{N_\alpha}]_{THEO}$ Ø		Outboard panel	27
139	CNATI	$(C_{N_{\alpha_{THEO}}})_I$		Inboard panel	27
140	CNATØ	$(C_{N_{\alpha_{THEO}}})_Ø$		Outboard panel	27
141	RKT	$K_\perp$			27

SUPERSONIC HIGH LIFT AND CONTROL VARIABLES

VARIABLE DEFINITION OF DATA BLOCK "SPR"

LOCATION	VARIABLE NAME	ENGINEERING SYMBOL	DATCOM REFERENCE	COMMENTS/DEFINITIONS	OVERLAY
1	BETA	β		Mach number parameter	41,53
2	C1	C_1	6.1.3.1	$2/\beta$; p. 6.1.3.1-7	41,53
3	C2	C_2	6.1.3.1	$(2.4M^4-4\beta^2)/(2\beta^4)$; p. 6.1.3.1-7	41,53
4	LAMHL	Λ_{HL}		Hinge line sweep, deg	41,53
5	PHITE	ϕ_{TE}		TE cross section angle perpendicular to hinge line, deg	41,53
6	K3	K_3	6.1.3.2	$1-(C_2/C_1)(\frac{SPR(5)}{57.3})$	41,53
7	SF	S_F		Total flap area	41,53
8	CLRLF	C_{ℓ_δ}		TE plain flap rolling effectiveness	53
9	KHB	$k_{H(B)}$	4.3.1.2	Figure 4.3.1.2-12A	53
10	KBH	$k_{B(H)}$	4.3.1.2	Figure 4.3.1.2-12A	53
11	YHS	$\overline{Y}_H$			53
12	BCLD1	$C_{L'_\delta}$	6.1.4.1	see p. 6.1.4.1-11	41,53
13	BCLD2	$C_{\ell'_\delta}$			41,53
14	TANHL	$\tan \Lambda_{HL}$			41,53
15	K1	K_1		$K_3(1+R_f+R_f^2)$	41
16	K2	K_2		$K_3(\tan \Lambda_{HL})$	41
17	BCMD1	$C_{m'_\delta}$			41,53
18	BCHD1	C_{h_δ}	6.1.3.2	Eq. 6.1.3.2-e	41,53
19	CMDT	C_{m_δ}		TE flaps pitching moment effectiveness	41
20	CLD	C_{L_δ}	6.1.4.1	TE flaps lift coefficient effectiveness	41
21-30		UNUSED			
31	CHRD(1)			Wing chord at innermost flap station	41
32	TLEOB				41,53
33	THLOB				41,53
34	TTEOB				41,53
35	TRTOFL			Flap taper ratio	41
36	CO			Wing chord at inboard location of flaps	41

VARIABLE DEFINITION OF DATA BLOCK "SPR"

LOCATION	VARIABLE NAME	ENGINEERING SYMBOL	DATCOM REFERENCE	COMMENTS/DEFINITIONS	OVERLAY
37-44	PAM1-PAM8			Pressure area moments calculated from wing tip	41
45-52	PAM1-PAM8			Pressure area moments calculated from wing root	41
53	CHAT	$(C_{h_\alpha})_{t/c=0}$		Hinge moment effectiveness for flat sided controls	41
54	CHAF	$(C_{h_\alpha})_{Flat}$		Hinge moment derivative for flat sided controls	41
55	AMA	M_a		Area moment about hinge line	41
56	CHDELF	C_{h_δ}		Hinge moment derivative for flat sided controls	41
57-59	CMD1-CMD3	ΔC_{m_δ}			41

SUBSONIC PANEL SIDESLIP VARIABLES

VARIABLE DEFINITION OF DATA BLOCK "STB"

LOCATION	VARIABLE NAME	ENGINEERING SYMBOL	DATCOM REFERENCE	COMMENTS/DEFINITIONS	OVERLAY
1		Z_w	5.2.2.1	Vertical distance from center line to the root chord quarter chord	29
2		η_{Γ_i}			29
3		$\eta_{\Gamma_{\phi=1}}$			29
4		Z'_w			29
5		$(C_{L_\alpha})_v$	5.3.1.1	Method of 4.1.3.2	17
6		$(A)_{TVT}$	5.3.1.1	Isolated panel geometric aspect ratio	17
7		K	5.3.1.1	Figure 5.3.1.1-25	17
8		K_f	5.2.2.1	Fuselage-length-effect correction factor Figure 5.2.2.1-26	17
9		X			29
10		C_v	5.3.1.1	Figure 5.3.1.1-22b	29
11		ℓ_p		Horizontal distance from the CG to quarter chord MAC of VT	29
12		Z_p		Vertical distance from center line to MAC of VT	29
13		ΔC_{ℓ_β}			17
14		$C_{\ell_\beta Z'_w}$			17
15		K_N	5.2.3.1	Figure 5.2.3.1-8	17
16-35		$(C_{Y_\beta})_{L.S.}$		Low speed value for C_{Y_β} vs. α	17
36-55		$(C_{Y_\beta}/C_L)_M$		C_{Y_β}/C_{L_β} at mach vs. α	17
56		KR_ℓ	5.2.3.1	Figure 5.2.3.1-9	17
57		K_i			17
58		$(C_{\ell_\alpha})_{TOT}$			17
59		h or ω	5.2.3.1	Average height of fuselage above wing root chord	29
60		h_2	5.2.3.1	Figure 5.2.3.1-8	29
61		h_1	5.2.3.1	Figure 5.2.3.1-8	29
62		S_{B_S}	5.2.3.1	Projected side area of body	29
63		ℓ_f	5.2.2.1	Fuselage length	29
64	YA311	$(\beta C_{\ell_\beta}/K^\Gamma)_1$	5.1.2.1	Inboard panel, Figure 5.1.2.1-31	17

VARIABLE DEFINITION OF DATA BLOCK "STB"

LOCATION	VARIABLE NAME	ENGINEERING SYMBOL	DATCOM REFERENCE	COMMENTS/DEFINITIONS	OVERLAY
65	YA31Ø	$(KC_{\ell_\beta}/K\Gamma)_\emptyset$	5.1.2.1	Outboard panel, Figure 5.1.2.1-31	17
66	YA30A	K_{m_Γ}	5.1.2.1	Figure 5.1.2.1-30a	17
67	YA29	C_{ℓ_β}/Γ	5.1.2.1	Figure 5.1.2.1-29	17
68	YA27	$(C_{\ell_\beta}/C_L)_{\Lambda c/2}$	5.1.2.1	Figure 5.1.2.1-27	17
69	YA30A	$\Delta C_{\ell_\beta}/(\theta \tan \Lambda_{c/4})$	5.1.2.1	Figure 5.1.2.1-30b	17
70	YA28B	$(C_{\ell_\beta}/C_L)_A$	5.1.2.1	Figure 5.1.2.1-28b	17
71	YA28A	K_{m_Λ}	5.1.2.1	Figure 5.1.2.1-28a	17
72		d_B		Body diameter	29
73		$(C_{Y_\beta})_{TVT_{EFF}}$			17
74		$(C_{Y_\beta})_{TVT_{(WBH)}}/(C_{Y_\beta})_{TVT_{EFF}}$			17
75		$(A_{Eff})_v/A_v$			17
76-95		$(C_{n_\beta}/C_L^2)_{L.S.}$	5.1.3.1	Low speed C_{n_β}/C_L^2	17
96-115		$C_{\ell_{\beta_J}}^*$			17
116		$(A_{Eff})_v$	5.3.1.1	Eqn. 5.3.1.1-a	17
117		$(1+\partial\sigma/\partial\beta)\times q_v/q_\infty$	5.4.1	Sidewash term	17
118		k	5.3.1.1	Figure 5.3.1.1-22d	17
119		K_H	5.3.1.1	Figure 5.3.1.1-22c	17
120		$A_{V(B)}/A_v$	5.3.1.1	Figure 5.3.1.1-22a	17
121		$A_{V(HB)}/A_{V(B)}$	5.3.1.1	Figure 5.3.1.1-22b	17
122		Γ^*		Effective dihedral angle	29
123-125		UNUSED			
126		$\Delta(C_{\ell_\beta}/C_L)_\emptyset$	5.1.2.1	Outboard panel, Figure 5.1.2.1-28b	17

VARIABLE DEFINITION OF DATA BLOCK "STB"

LOCATION	VARIABLE NAME	ENGINEERING SYMBOL	DATCOM REFERENCE	COMMENTS/DEFINITIONS	OVERLAY
127		$\Delta(C_{\ell_\beta}/C_L)_1$	5.1.2.1	Inboard panel, Figure 5.1.2.1-28b	17
128		$(C_{\ell_\beta}/C_L)'_{\Lambda_{c/2_\emptyset}}$	5.1.2.1	Outboard panel, Figure 5.1.2.1-27	17
129		$(C_{\ell_\beta}/C_L)'_{A_\emptyset}$	5.1.2.1	Outboard panel, Figure 5.1.2.1-28b	17
130		$(K_{m_\Lambda})_\emptyset$	5.1.2.1	Outboard panel, Figure 5.1.2.1-28a	17
131		$(C_{\ell_\beta}/C_L)_\emptyset$	5.1.2.1	Outboard panel C_{ℓ_β}/C_L ratio	17
132		$(C_{\ell_\beta}/C_L)_{\Lambda_{c/2_1}}$	5.1.2.1	Inboard panel, Figure 5.1.2.1-27	17
133		$(C_{\ell_\beta}/C_L)_{A_1}$	5.1.2.1	Inboard panel, Figure 5.1.2.1-28b	17
134		$(K_{m_\Lambda})_1$	5.1.2.1	Inboard panel, Figure 5.1.2.1-28a	17
135		$(C_{\ell_\beta}/C_L)_1$	5.1.2.1	Inboard panel C_{ℓ_β}/C_L ratio	17

SUBSONIC HORIZONTAL TAIL PANEL SIDESLIP VARIABLES

VARIABLE DEFINITION OF DATA BLOCK "STBH"

LOCATION	VARIABLE NAME	ENGINEERING SYMBOL	DATCOM REFERENCE	COMMENTS/DEFINITIONS	OVERLAY
1		Z_w	5.2.2.1	Vertical distance from center line to the root chord quarter chord	29
2		η_{Γ_i}			29
3		$\eta_{\Gamma_{\phi=1}}$			29
4		Z_w'			29
5		$(C_{L_\alpha})_{VF}$	5.3.1.1	Method of 4.1.3.2	17
6			UNUSED		
7		K	5.3.1.1	Figure 5.3.1.1-25	17
8		K_f	5.2.2.1	Fuselage-length-effect correction factor Figure 5.2.2.1-26	17
9		X			29
10		C_v	5.3.1.1	Figure 5.3.1.1-22b	29
11		ℓ_p		Horizontal distance from the CG to quarter chord MAC of VF	29
12		Z_p		Vertical distance from center line to MAC of VF	29
13		ΔC_{ℓ_β}			17
14		$C_{\ell_\beta Z_w'}$			17
15		K_N	5.2.3.1	Figure 5.2.3.1-8	17
16-35		$(C_{Y_\beta})_{L.S.}$		Low speed value for C_{Y_β} vs. α	17
36-55		$(C_{Y_\beta}/C_L)_M$		C_{Y_β}/C_{L_β} at mach vs. α	17
56		KR_ℓ	5.2.3.1	Figure 5.2.3.1-9	17
57		K_i			17
58		$(C_{\ell_\alpha})_{TOT}$			17
59		h or ω	5.2.3.1	Average height of fuselage above wing root chord	29
60		h_2	5.2.3.1	Figure 5.2.3.1-8	29
61		h_1	5.2.3.1	Figure 5.2.3.1-8	29
62		S_{B_S}	5.2.3.1	Projected side area of body	29
63		ℓ_f	5.2.2.1	Fuselage length	29
64	YA311	$(\beta C_{\ell_\beta}/K^\Gamma)_I$	5.1.2.1	Inboard panel, Figure 5.1.2.1-31	17

VARIABLE DEFINITION OF DATA BLOCK "STBH"

LOCATION	VARIABLE NAME	ENGINEERING SYMBOL	DATCOM REFERENCE	COMMENTS/DEFINITIONS	OVERLAY
65	YA31Ø	$(\beta C_{\ell_\beta}/K\Gamma)_\emptyset$	5.1.2.1	Outboard panel, Figure 5.1.2.1-31	17
66	YA30A	K_{m_Γ}	5.1.2.1	Figure 5.1.2.1-30a	17
67	YA29	C_{ℓ_β}/Γ	5.1.2.1	Figure 5.1.2.1-29	17
68	YA27	$(C_{\ell_\beta}/C_L)_{\Lambda c/2}$	5.1.2.1	Figure 5.1.2.1-27	17
69	YA30A	$\Delta C_{\ell_\beta}/(\theta \tan \Lambda_{c/4})$	5.1.2.1	Figure 5.1.2.1-30b	17
70	YA28B	$(C_{\ell_\beta}/C_L)_A$	5.1.2.1	Figure 5.1.2.1-28b	17
71	YA28A	K_{m_Λ}	5.1.2.1	Figure 5.1.2.1-28a	17
72		d_B		Body diameter	29
73		UNUSED			
74		UNUSED			
75		UNUSED			
76-95		$(C_{n_\beta}/C_L^2)_{L.S.}$	5.1.3.1	Low speed C_{n_β}/C_L^2	17
96-115		$C_{\ell_{\beta_J}}^*$			17
116		$(A_{Eff})_v$	5.3.1.1	Eqn. 5.3.1.1-a	17
117		$(1+\partial\sigma/\partial\beta)\times q_v/q_\infty$	5.4.1	Sidewash term	17
118		k	5.3.1.1	Figure 5.3.1.1-22d	17
119		K_H	5.3.1.1	Figure 5.3.1.1-22c	17
120		$A_{V(B)}/A_v$	5.3.1.1	Figure 5.3.1.1-22a	17
121		$A_{V(HB)}/A_{V(B)}$	5.3.1.1	Figure 5.3.1.1-22b	17
122		Γ^*		Effective dihedral angle	29
123-125		UNUSED			
126		$\Delta(C_{\ell_\beta}/C_L)_\emptyset$	5.1.2.1	Outboard panel, Figure 5.1.2.1-28b	17

VARIABLE DEFINITION OF DATA BLOCK "STBH"

LOCATION	VARIABLE NAME	ENGINEERING SYMBOL	DATCOM REFERENCE	COMMENTS/DEFINITIONS	OVERLAY
127		$\Delta(C_{\ell_\beta}/C_L)_I$	5.1.2.1	Inboard panel, Figure 5.1.2.1-28b	17
128		$(C_{\ell_\beta}/C_L)'_{\Lambda_{c/2_\emptyset}}$	5.1.2.1	Outboard panel, Figure 5.1.2.1-27	17
129		$(C_{\ell_\beta}/C_L)'_{A_\emptyset}$	5.1.2.1	Outboard panel, Figure 5.1.2.1-28b	17
130		$(K_{m_\Lambda})_\emptyset$	5.1.2.1	Outboard panel, Figure 5.1.2.1-28a	17
131		$(C_{\ell_\beta}/C_L)_\emptyset$	5.1.2.1	Outboard panel C_{ℓ_β}/C_L ratio	17
132		$(C_{\ell_\beta}/C_L)_{\Lambda_{C/2_I}}$	5.1.2.1	Inboard panel, Figure 5.1.2.1-27	17
133		$(C_{\ell_\beta}/C_L)_{A_I}$	5.1.2.1	Inboard panel, Figure 5.1.2.1-28b	17
134		$(K_{m_\Lambda})_I$	5.1.2.1	Inboard panel, Figure 5.1.2.1-28a	17
135		$(C_{\ell_\beta}/C_L)_I$	5.1.2.1	Inboard panel C_{ℓ_β}/C_L ratio	17

SUPERSONIC HORIZONTAL TAIL VARIABLES

VARIABLE DEFINITION OF DATA BLOCK "STG"

LOCATION	VARIABLE NAME	ENGINEERING SYMBOL	DATCOM REFERENCE	COMMENTS/DEFINITIONS	OVERLAY
1	BETA	β		Mach number parameter	22
2	BOVERT	$\beta/\tan\Lambda_{LE}$	4.1.3.2		22
3	CNNNT	$C_{N_\alpha}/(C_{N_\alpha})$ Theory	4.1.3.2		22
4	BCNA	βC_{N_α}	4.1.3.2		22
5	CNTHRY	$(C_{N_\alpha})_{Theory}$	4.1.3.2		22
6	CNAA	C_{N_α}/A	4.1.3.2		22
7	CNA1	C_{N_α}	4.1.3.2	HT normal force slope, per radian	22
8	DELTYT	$\Delta Y_\perp$	4.1.3.2		22
9	DELTDT	$\delta_\perp$	4.1.3.2	Semi-wedge angle measured perpendicular to HT LE	22
10	TLE192	$\tan\Lambda_{LE}/1.92$			22
11	E	E			22
12	CC	C			22
13-32	CNAAA	$(C_{N_{\alpha\alpha}})_J$	4.1.3.3		22
33-52	ALPHAJ	α_J			22
53-72	CDL	$(C_{D_L})_J$			22
73	A2	A_2	4.1.3.2		22
74	S2	S_2	4.1.3.2		22
75	CNAAAP	$C_{N'_{\alpha\alpha}}$	4.1.3.3		22
76	XACCRI	$(X_{ac}/C_r)_I$		Inboard panel	22
77	CNTBW	$(C_{N_\alpha})_{BW}$ Theory			22
78	XACCRØ	$(X_{ac}/c_r)_\emptyset$		Outboard panel	22
79	CDW	C_{D_W}			22
80	$C_{D\emptyset}$	C_{D_0}		HT zero lift drag coefficient	22
81	DRAGC	$\pi A \frac{C_{D_L}}{C_L{}^2}\left[\frac{P}{P+1}\right]$			22
82	P	P			22
83	CFØ	$C_{f_\emptyset}$		Outboard panel	22
84	CFI	C_{f_I}		Inboard panel	22

VARIABLE DEFINITION OF DATA BLOCK "STG"

LOCATION	VARIABLE NAME	ENGINEERING SYMBOL	DATCOM REFERENCE	COMMENTS/DEFINITIONS	OVERLAY
85	RNØ	$R_{C_\emptyset}$		Outboard panel	22
86	RNI	R_{C_I}		Inboard panel	22
87	CDF	C_{D_f}			22
88	CF	C_f			22
89	RLCØFF	R_{ℓ_c}			22
90	RNN	R_ℓ			22
91	CNAØ	$(C_{N_\alpha})_\emptyset$		Outboard panel	22
92	CNAI	$(C_{N_\alpha})_I$		Inboard panel	22
93	RMACH	$(M_\perp)_{\alpha=0}$			22
94	DETACH				22
95-114		UNUSED			
115	DETANG	α^*			22
116	CNAAST	$C_{N_{\alpha\alpha}}^*$	4.1.3.3		22
117	DETALP	$\Delta\alpha$			22
118	CRBW	$(C_r)_{BW}$			22
119	SBW	S_{BW}			22
120	ARBW	A_{BW}			22
121	TAPBW	λ_{BW}			22
122	CLEBW	$(C_{LE})_{BW}$			22
123	CRGLV	$(C_r)_g$		Glove component	22
124	SGLV	S_g	4.1.3.2	Glove component	22
125	ARGLV	A_g	4.1.3.2	Glove component	22
126	BE	b_E	4.1.3.2	Extension component	22
127	CN1	$(C_{N_\alpha}/A)_1$	4.1.3.2		22
128	CN2	$(C_{N_\alpha}/A)_2$	4.1.3.2		22
129	CNAE	$(C_{N_\alpha})_E$	4.1.3.2	Extension component	22
130	CNAGLV	$(C_{N_\alpha})_g$	4.1.3.2	Glove component	22
131	CNABW	$(C_{N_\alpha})_{BW}$	4.1.3.2		22
132	CLEGLV	$(C_{LE})_g$	4.1.3.2	Glove component	22
133	RKL	K_L			22
134	XACCR	$X_{ac}/\bar{C}$			22

VARIABLE DEFINITION OF DATA BLOCK "STG"

LOCATION	VARIABLE NAME	ENGINEERING SYMBOL	DATCOM REFERENCE	COMMENTS/DEFINITIONS	OVERLAY
135	DCMCL	dC_m/dC_N			22
136	CMA	C_{M_α}			22
137	CNCNTI	$[C_{N_\alpha}/C_{N_\alpha}]_{THEO}$ I		Inboard panel	22
138	CNCNTØ	$[C_{N_\alpha}/C_{N_\alpha}]_{THEO}$ Ø		Outboard panel	22
139					
139	CNATI	$(C_{N_{\alpha_{THEO}}})_I$		Inboard panel	22
140	CNATØ	$(C_{N_{\alpha_{THEO}}})_Ø$		Outboard panel	22
141	RKT	$K_\perp$			22

SUPERSONIC WING-BODY-HORIZONTAL TAIL PARAMETERS

VARIABLE DEFINITION OF DATA BLOCK "STP"

LOCATION	VARIABLE NAME	ENGINEERING SYMBOL	DATCOM REFERENCE	COMMENTS/DEFINITIONS	OVERLAY
1	$C_{D\emptyset}$	$(C_{D\emptyset})_V$			20
2-21	CMAH	$(C_{m_\alpha})_{T_J}$			28
22-41	CLTB	C_{LTB_J}			28
42-61	CDAWB	$(C_{D_\alpha})_{WB_J}$			28
62	DD	$(d_b)_H$			28
63	TRINØ				28
64	RKBW		4.3.1.2	Figure 4.3.1.2-11	28
65	KBW	$K_{B(H)}$			28
66	KWB	$K_{H(B)}$			28
67	CLAHB	$(C_{L_\alpha})_{H(B)}$			28
68	CLABH	$(C_{L_\alpha})_{B(H)}$			28
69	YT		4.4.1	Figure 4.4.1-67	28
70	RCREØ2	r_H			28
71-90	IVWH	$IV_{W(H)_J}$			28
91-110	DELTAT	ΔT_J			28
111-130	GAMMA	$(\Gamma/2\pi\alpha Vr)_T$			28
131	KKBW	$k_{B(H)}$			28
132	KKWB	$k_{H(B)}$			28
133-152	IVBH	$IV_{B(H)}$			28
153	DXACWB	$(\Delta X_{ac})_{WB}$			28
154	CDØWBT	$(C_{D\emptyset})_{WBH}$			28
155	CDØWBV	$(C_{D\emptyset})_{WBHV}$			28
156	CDØVF	$(C_{D_0})_{VF}$			

SUPERSONIC WING-BODY VARIABLES

VARIABLE DEFINITION OF DATA BLOCK "SWB"

LOCATION	VARIABLE NAME	ENGINEERING SYMBOL	DATCOM REFERENCE	COMMENTS/DEFINITIONS	OVERLAY
1		UNUSED			
2	KKWB	$k_{W(B)}$			20,35
3	XACN	$(x_{ac})_N$			20
4	CDØWB	$(C_{D0})_{WB}$		Wing-body zero lift drag coefficient	20
5	DD	d_{Body}			20,25
6	BETA	β		Mach number parameter	20
7	CLABW	$(C_{L_\alpha})_{B(W)}$			20
8	XACBW	$(X_{ac}/\bar{c}_r)_{B(W)}$			20,25
9	FA	f_a			20
10	CLI	$C_{\ell_{\alpha_i}}$			20
11	KBW	$K_{B(W)}$			20,25
12-31	IVBW	$^{I}V_{B(W)_J}$			20
32	RKBW		4.3.1.2	Figure 4.3.1.2-11	20,25
33	CLAWB	$(C_{L_\alpha})_{W(B)}$			20
34	FN	f_N			20
35	KWB	$K_{W(B)}$			20,25
36	XAC	$X_{ac}/\bar{c}_r$			20
37	KKBW	$k_{B(W)}$			20,35
38	RLAP	ℓ_a'			20
39	XACA		4.3.2.1	Figure 4.3.2.1-37	20,25
40-59	GAMMA	$\Gamma/2\pi\alpha v(r)$ cre/2			20
60	TRINØ				20,25
61	XCPLN	$(X_{CP}/C_r)_N$			20

SYNTHESIS PARAMETERS

VARIABLE DEFINITION OF DATA BLOCK "SYNA"

LOCATION	VARIABLE NAME	ENGINEERING SYMBOL	DATCOM REFERENCE	COMMENTS/DEFINITIONS	OVERLAY
1	XCG	X_{CG}		Input via NAMELIST SYNTHS	
2	XW	X_w			
3	ZW	Z_w			
4	ALIW	$(\alpha_i)_w$			
5	ZCG	Z_{CG}			
6	XH	X_H			
7	ZH	Z_H			
8	ALIH	$(\alpha_i)_H$			
9	XV	X_V			
10	VERTUP				
11	HINAX				
12	XVF				
13	SCALE				
14	ZV				
15	ZVF				

SUPERSONIC SPANWISE LOADING COEFFICIENT PARAMETERS
AND HIGH-LIFT AND CONTROL DRAG VARIABLES

VARIABLE DEFINITION OF DATA BLOCK "TCD"

LOCATION	VARIABLE NAME	ENGINEERING SYMBOL	DATCOM REFERENCE	COMMENTS/DEFINITIONS	OVERLAY
1-14	CDI	$(G/\delta)_I$	6.1.5.1	Inboard panel spanwise loading coefficient	37
15-28	CDØ	$(G/\delta)_{\emptyset}$	6.1.5.1	Outboard panel spanwise loading coefficient	37
29-42	GDFULL	(G/δ)	6.1.5.1	Panel spanwise loading coefficient	37
43	GD1H	$(G/\delta)_{\eta=.924}$	6.1.5.1	Spanwise loading coefficient at η	37
44	GD2H	$(G/\delta)_{\eta=.707}$	6.1.5.1		37
45	GD3H	$(G/\delta)_{\eta=.383}$	6.1.5.1		37
46	GD4H	$(G/\delta)_{\eta=0.0}$	6.1.5.1		37
47	KPRM	K'	6.1.7	Figure 6.1.7-24	38
48		UNUSED			
49-58	DELCDF	ΔC_{d_f}	6.1.7	Figure 6.1.7-22	38

TRANSONIC LONGITUDINAL AND LATERAL-DIRECTIONAL STABILITY VARIABLES

VARIABLE DEFINITION OF DATA BLOCK "TRA"

LOCATION	VARIABLE NAME	ENGINEERING SYMBOL	DATCOM REFERENCE	COMMENTS/DEFINITIONS	OVERLAY
1	CLA14	$(C_{L_\alpha})_{M=1.4}$	4.1.3.2	Lift curve slope at M=1.4	24
2	ZWC	$Z_w/\bar{c}_w$			35
3	K	k			24
4	MACH	M		Mach number	24
5	MFBØ	$(M_{fb})_{\Lambda=0}$	4.1.3.2	Zero sweep force break Mach No. Figure 4.1.3.2-53a	24
6	MFB	M_{fb}	4.1.3.2	Force break Mach No., Figure 4.1.3.2-53b	24
7	AØC	a/c	4.1.3.2		24
8	CFBCT	$C_{L_{\alpha fb}}/(C_{L_{\alpha fb}})_T$	4.1.3.2	Figure 4.1.3.2-54a	24
9	BETAFB	β_{FB}		Force break mach parameter	24
10	CLAFBT	$(C_{L_{\alpha fb}})_T$	4.1.3.2	Total wing $(C_{L_{\alpha fb}})$	24
11	AC	$Z/\bar{c}_w$			35
12	CLAFB	$(C_{L_\alpha})_{fb}$	4.1.3.2	Lift curve slope at M_{fb}	24
13	CLAA	$(C_{L_\alpha})_a$	4.1.3.2	Lift curve slope at $M_a=M_{fb}+.07$	24
14	BØC	b/c	4.1.3.2		24
15	CLAB	$(C_{L_\alpha})_b$	4.1.3.2	Lift curve slope at $M_b=M_{fb}+.14$	24
16-20	MT	M_T		Mach interpolation in transonic	24
21-25	CLAMT	$(C_{L_\alpha})_{MT}$		Lift curve slope interpolation table at M_T	24
26	DJ	δ_J			35
27	C1	C_1	4.1.3.4	Aspect ratio classification	24
28	ARATIØ	$\frac{\Lambda(128)}{(1+C_1)\times}$	4.1.3.4		24
29	BU4	$\frac{\cos\Lambda_o}{(1+C_1)\Lambda_r^*\times}\frac{\cos\Lambda_o}{.8}$	4.1.3.4		24
30	CLMAX6	$(C_{L_{max}})_{M=.6}$	4.1.3.4		24
31	ACLBA5	$(\alpha_{C_{L_{max}}})_{Base}$	4.1.3.4	Figure 4.1.3.4-25a	24

VARIABLE DEFINITION OF DATA BLOCK "TRA"

LOCATION	VARIABLE NAME	ENGINEERING SYMBOL	DATCOM REFERENCE	COMMENTS/DEFINITIONS	OVERLAY
32	DACMA6	$(\Delta\alpha_{C_{L_{max}}})_{M=.6}$	4.1.3.4	Figure 4.1.3.4-21b	24
33	C3	C_3	4.1.3.4	Figure 4.1.3.4-26b	24
34	DALCM	$\Delta\alpha_{C_{L_{max}}}$	4.1.3.4	Figure 4.1.3.4-21b	24
35	DCLMAX	$\Delta C_{L_{max}}$	4.1.3.4	Figure 4.1.3.4-22	24
36	ALCLM6	$(\alpha_{C_{L_{max}}})_{M=.6}$	4.1.3.4		24
37	ALCLMT	$\alpha_{C_{L_{max}}}$	4.1.3.4	Wing angle of attack for max lift	24
38	CLMAXT	$C_{L_{max}}$	4.1.3.4	Wing max lift coefficient	24
39	RLCØFF	R_ℓ			24
40	RNN	R_N			24
41	RL	L			24
42	CF	C_f		Skin friction coefficient	24
43-57	CDW2	$C_{D_{W_M}}$			24
58-66		UNUSED			
67	CDW	C_{D_W}			24
68	CDF	C_{D_f}			24
69	DQØQ	$\Delta q/q_o$			35
70	CLAW6	$[(C_{L_\alpha})_W]_{M=.6}$			24
71	CLAWB	$C_{L_{\alpha W(B)}}$			25
72	CLABW	$C_{L_{\alpha B(W)}}$			25
73	CDOWB	$(C_{D_o})_{WB}$			
74	CMOWB	$(C_{M_o})_{WB}$			35
75	CDOWBT	$(C_{D_o})_{WBT}$			24
76	CDBB	C_{D_b}			24
77	CDWB	D_{D_W}			24
78	CDØB	$(C_{D_O})_{Body}$		Body zero lift drag coefficient	24
79	CDFB	$(C_{D_f})_{Body}$		Friction drag coefficient	24
80	CDPB	$(C_{D_P})_{Body}$		Pressure drag coefficient	24
81	CDBFIG	$C_{D_b}/(d_b/d)^2$			24
82	DCNA	$(dC_N/dM)_{1.4}$			24

VARIABLE DEFINITION OF DATA BLOCK "TRA"

LOCATION	VARIABLE NAME	ENGINEERING SYMBOL	DATCOM REFERENCE	COMMENTS/DEFINITIONS	OVERLAY
83-88	XMV				25
89-94	XACV	X_{ac}/C_r^*			25
95	XACW	$X_{ac}/(\bar{c}/4)$			25
96	DELXAC	$\Delta X_{ac}/C_r^*$	4.4.2	Figure 4.4.2-28	25
97-104	XACP				25
105	XAC				25
106	XACBW	$(X_{ac}/\bar{C}_r)_{B(W)}$			25
107	XACWB	$(X_{ac}/\bar{C}_r)_{W(B)}$			25
108		UNUSED			

TRANSONIC LONGITUDINAL AND LATERAL-DIRECTIONAL STABILITY VARIABLES OF HORIZONTAL TAIL

VARIABLE DEFINITION OF DATA BLOCK "TRAH"

LOCATION	VARIABLE NAME	ENGINEERING SYMBOL	DATCOM REFERENCE	COMMENTS/DEFINITIONS	OVERLAY
1	CLA14	$(C_{L_\alpha})_{M=1.4}$	4.1.3.2	Lift curve slope at M=1.4	24
2		UNUSED			
3	K	k			24
4	MACH	M		Mach number	24
5	MFBØ	$(M_{fb})_{\Lambda=0}$	4.1.3.2	Zero sweep force break Mach No. Figure 4.1.3.2-53a	24
6	MFB	M_{fb}	4.1.3.2	Force break Mach No., Figure 4.1.3.2-53b	24
7	AØC	a/c	4.1.3.2		24
8	CFBCT	$C_{L_{\alpha fb}}/(C_{L_{\alpha fb}})_T$	4.1.3.2	Figure 4.1.3.2-54a	24
9	BETAFB	β_{FB}		Force break mach parameter	24
10	CLAFBT	$(C_{L_{\alpha_{fb}}})_T$	4.1.3.2	Total wing $(C_{L_{\alpha_{fb}}})$	24
11		UNUSED			
12	CLAFB	$(C_{L_\alpha})_{fb}$	4.1.3.2	Lift curve slope at M_{fb}	24
13	CLAA	$(C_{L_\alpha})_a$	4.1.3.2	Lift curve slope at $M_a=M_{fb}+.07$	24
14	BØC	b/c	4.1.3.2		24
15	CLAB	$(C_{L_\alpha})_b$	4.1.3.2	Lift curve slope at $M_b=M_{fb}+.14$	24
16-20	MT	M_T		Mach interpolation in transonic	24
21-25	CLAMT	$(C_{L_\alpha})_{MT}$		Lift curve slope interpolation table at M_T	24
26		UNUSED			
27	C1	C_1	4.1.3.4	Aspect ratio classification	24
28	ARATIØ	$\frac{A^{**}(128)}{(1+C_1)\times}$	4.1.3.4		24
29	BU4	$(1+C_1)A_r^{*}\times\frac{\cos\Lambda_o}{.8}$	4.1.3.4		24
30	CLMAX6	$(C_{L_{max}})_{M=.6}$	4.1.3.4		24
31	ACLBA5	$(\alpha_{C_{L_{max}}})_{Base}$	4.1.3.4	Figure 4.1.3.4-25a	24

VARIABLE DEFINITION OF DATA BLOCK "TRAH"

LOCATION	VARIABLE NAME	ENGINEERING SYMBOL	DATCOM REFERENCE	COMMENTS/DEFINITIONS	OVERLAY
32	DACMA6	$(\Delta\alpha_{C_{L_{max}}})_{M=.6}$	4.1.3.4	Figure 4.1.3.4-21b	24
33	C3	C_3	4.1.3.4	Figure 4.1.3.4-26b	24
34	DALCM	$\Delta\alpha_{C_{L_{max}}}$	4.1.3.4	Figure 4.1.3.4-21b	24
35	DCLMAX	$\Delta C_{L_{max}}$	4.1.3.4	Figure 4.1.3.4-22	24
36	ALCLM6	$(\alpha_{C_{L_{max}}})_{M=.6}$	4.1.3.4		24
37	ALCLMT	$\alpha_{C_{L_{max}}}$	4.1.3.4	H.T. angle of attack for max lift	24
38	CLMAXT	$C_{L_{max}}$	4.1.3.4	H.T. max lift coefficient	24
39	RLCØFF	R_ℓ			24
40	RNN	R_N			24
41	RL	L			24
42	CF	C_f		Skin friction coefficient	24
43-57	CDW2	$C_{D_{W_M}}$			24
58-66		UNUSED			
67	CDW	C_{D_W}			24
68	CDF	C_{D_f}			24
69	DQØQ	$\Delta q/q_o$			35
70	CLAW6	$[(C_{L_\alpha})_W]_{M=.6}$			24
71	CLAWB	$C_{L_{\alpha W(B)}}$			25
72	CLABW	$C_{L_{\alpha B(W)}}$			25
73	CDOWB	$(C_{D_o})_{WB}$			
74	CMOWB	$(C_{M_o})_{WB}$			
75		UNUSED			
76	CDBB	C_{D_b}			24
77	CDWB	D_{D_W}			24
78	CDØB	$(C_{D_0})_{Body}$		Body zero lift drag coefficient	24
79	CDFB	$(C_{D_f})_{Body}$		Friction drag coefficient	24
80	CDPB	$(C_{D_P})_{Body}$		Pressure drag coefficient	24
81	CDBFIG	$C_{D_b}/(d_b/d)^2$			24
82	DCNA	$(dC_N/dM)_{1.4}$			24

VARIABLE DEFINITION OF DATA BLOCK "TRAH"

LOCATION	VARIABLE NAME	ENGINEERING SYMBOL	DATCOM REFERENCE	COMMENTS/DEFINITIONS	OVERLAY
83-88	XMV				25
89-94	XACV	X_{ac}/C_r^*			25
95	XACW	$X_{ac}/(\bar{c}/4)$			25
96	DELXAC	$\Delta X_{ac}/C_r^*$	4.4.2	Figure 4.4.2-28	25
97-104	XACP				25
105	XAC				25
106	XACBW	$(X_{ac}/\bar{C}_r)_{B(W)}$			25
107	XACWB	$(X_{ac}/\bar{C}_r)_{W(B)}$			25
108	CDØH	$C_{D_{O_{H(W)}}}$			35

SUBSONIC TRIM VARIABLES FOR CONTROL DEVICE ON WING OR TAIL

VARIABLE DEFINITION OF DATA BLOCK "TRM"

LOCATION	VARIABLE NAME	ENGINEERING SYMBOL	DATCOM REFERENCE	COMMENTS/DEFINITIONS	OVERLAY
1-20	ALPHA	$\alpha_J - \varepsilon_J$			38
21	NTRIM				38
22	TSTØP			=1, for lack of control moment =2, for $\alpha > \alpha_{C_{L_{max}}}$	38

SUBSONIC TRIM VARIABLES FOR AN ALL MOVABLE HORIZONTAL STABILIZER

VARIABLE DEFINITION OF DATA BLOCK "TRM2"

LOCATION	VARIABLE NAME	ENGINEERING SYMBOL	DATCOM REFERENCE	COMMENTS/DEFINITIONS	OVERLAY
1-20	CLT	$(C_{L_{TB}})_T$			38
21	NTRIM				38
22	TSTØP			=1, for lack of control moment =2, for $\alpha > \alpha_{C_{L_{max}}}$	38

TRANSONIC HIGH LIFT AND CONTROL VARIABLES

VARIABLE DEFINITION OF DATA BLOCK "TRN"

LOCATION	VARIABLE NAME	ENGINEERING SYMBOL	DATCOM REFERENCE	COMMENTS/DEFINITIONS	OVERLAY
1	ENCEPE	η_{CP}			40
2	YH	$\overline{Y}_H$			40
3	ETAQRS	$\eta(q_H/q)$		Tail effectiveness for body mounted horizontal tails	40
4	CLDELC	C_{ℓ_δ}		Rolling effectiveness of horizontal tail M < 1	40
5	CLDALC	C_{ℓ_δ}		Rolling effectiveness of horizontal tail, M $\geq$ 1	40
6	KBH				
7	KHB				

TWIN VERTICAL TAIL INPUTS

VARIABLE DEFINITION OF DATA BLOCK " TV"

LOCATION	VARIABLE NAME	ENGINEERING SYMBOL	DATCOM REFERENCE	COMMENTS/DEFINITIONS	OVERLAY
1	BVP	b_V'		Input via NAMELIST TVTPAN	
2	BV	b_V			
3	BDV	$2r_1$			
4	BH	b_H			
5	SV	S_V			
6	VPHITE	ϕ_{TE}			
7	VLP	ℓ_P			
8	ZP	Z_P			

VENTRAL FIN INPUT VARIABLES

VARIABLE DEFINITION OF DATA BLOCK "VFIN"

LOCATION	VARIABLE NAME	ENGINEERING SYMBOL	DATCOM REFERENCE	COMMENTS/DEFINITIONS	OVERLAY
1	CHRDTP	C_t		Input via NAMELIST VFPLNF	
2	SSPNØP	$b_o^*/2$			
3	SSPNE	$b^*/2$			
4	SSPN	$b/2$			
5	CHRDBP	C_b			
6	CHRDR	C_r			
7	SAVSI	$(\Lambda_{X/C})_I$			
8	SAVSØ	$(\Lambda_{X/C})_Ø$			
9	CHSTAT	X/C			
10		UNUSED			
11	TWISTA	θ			
12	SSPNDD	$(b/2)\Gamma_o$			
13	DHDADI	Γ_I			
14	DHDADØ	$\Gamma_Ø$			
15	TYPE				
16	TØVC	t/c		Input via NAMELIST VFSCHR	
17	DELTAY	ΔY			
18	XØVC	$(X/C)_{max}$			
19	CLI	C_{ℓ_i}			
20	ALPHAI	α_i			
21-40	CLALPA	C_{ℓ_α}			
41-60	CLMAX	$C_{\ell_{max}}$			
61	CMØ	$C_{m_Ø}$			
62	LERI	$(R_{LE})_I$			
63	LERØ	$(R_{LE})_Ø$			
64	CAMBER				
65	TØVCØ	$(t/c)_Ø$			
66	XØVCØ	$(X/C)_{max_o}$			
67	CMØT	$(C_{m_o})_Ø$			
68	CLMAXL	$(C_{\ell_{max}})_{M=0}$			
69	CLAMØ	$(C_{\ell_\alpha})_{M=0}$			

VARIABLE DEFINITION OF DATA BLOCK "VFIN"

LOCATION	VARIABLE NAME	ENGINEERING SYMBOL	DATCOM REFERENCE	COMMENTS/DEFINITIONS	OVERLAY
70	TCEFF	$(t/c)_{Eff}$		Input via NAMELIST VFSCHR	
71	KSHARP	K			
72-91	XAC	X_{ac}			
92	ARCL				
93-94		UNUSED			
95-114	SVWB	$S_{V(WB)}$			
115-134	SVB	$S_{V(B)}$			
135-154	SVHB	$S_{V(HB)}$			

VERTICAL TAIL INPUT VARIABLES

VARIABLE DEFINITION OF DATA BLOCK "VTIN"

LOCATION	VARIABLE NAME	ENGINEERING SYMBOL	DATCOM REFERENCE	COMMENTS/DEFINITIONS	OVERLAY
1	CHRDTP	C_t		Input via NAMELIST VTPLNF	
2	SSPNØ?	$b_o^*/2$			
3	SSPNE	$b^*/2$			
4	SSPN	$b/2$			
5	CHRDBP	C_b			
6	CHRDR	C_r			
7	SAVSI	$(\Lambda_{X/C})_I$			
8	SAVSØ	$(\Lambda_{X/C})_Ø$			
9	CHSTAT	X/C			
10		UNUSED			
11	TWISTA	θ			
12	SSPNDD	$(b/2)\Gamma_o$			
13	DHDADI	Γ_I			
14	DHDADØ	$\Gamma_Ø$			
15	TYPE				
16	TØVC	t/c		Input via NAMELIST VTSCHR	
17	DELTAY	ΔY			
18	XØVC	$(X/C)_{max}$			
19	CLI	C_{ℓ_i}			
20	ALPHAI	α_i			
21-40	CLALPA	C_{ℓ_α}			
41-60	CLMAX	$C_{\ell_{max}}$			
61	CMØ	$C_{m_Ø}$			
62	LERI	$(R_{LE})_I$			
63	LERØ	$(R_{LE})_Ø$			
64	CAMBER				
65	TØVCØ	$(t/c)_Ø$			
66	XØVCØ	$(X/C)_{max_o}$			
67	CMØT	$(C_{m_o})_Ø$			
68	CLMAXL	$(C_{\ell_{max}})_{M=0}$			
69	CLAMØ	$(C_{\ell_\alpha})_{M=0}$			

VARIABLE DEFINITION OF DATA BLOCK "VTIN"

LOCATION	VARIABLE NAME	ENGINEERING SYMBOL	DATCOM REFERENCE	COMMENTS/DEFINITIONS	OVERLAY
70	TCEFF	$(t/c)_{Eff}$		Input via NAMELIST VTSCHR	
71	KSHARP	K			
72-91	XAC	X_{ac}			
92	ARCL				
93-94		UNUSED			
95-114	SVWB	$S_{V(WB)}$			
115-134	SVB	$S_{V(B)}$			
135-154	SVHB	$S_{V(HB)}$			

SUBSONIC WING-BODY VARIABLES

VARIABLE DEFINITION OF DATA BLOCK "WB"

LOCATION	VARIABLE NAME	ENGINEERING SYMBOL	DATCOM REFERENCE	COMMENTS/DEFINITIONS	OVERLAY
1		UNUSED			
2		$K_{W(B)}$		Interference factor of wing on body	7
3		$K_{B(W)}$		Interference factor of body on wing	7
4		$(C_{L_\alpha})_{W(B)}$		Lift curve slope of wing in presence of body	7
5		$(C_{L_\alpha})_{B(W)}$		Lift curve slope of body in presence of wing	7
6		$(C_{D_0})_{WB}$		Wing-body zero-lift drag	7
7		$k_{W(B)}$			7
8		$k_{B(W)}$			7
9		$(C_{L_i})_{W(B)}$			7
10		$(C_{L_i})_{B(W)}$			7
11		$(C_{L_i})_{WB}$			7
12		$(X_{ac}/\bar{c})_{WB}$			7
13		$(X_{ac}/\bar{c})_{B(W)}$			7,25
14		$(X'_{ac}/c_{r_e})_{B(W)}$			7,25
15		$(X'_{ac}/c_{r_e})_{\beta A=0}$			7,25
16		$C_{m_{0WB}}$	4.3.2.1	Wing-body zero-lift pitching moment	7
17		$(C_{D_0})_{WB}$		Wing-body zero lift drag coefficient	7
18		R_{WB}			7
19		R_{L_B}			7
20		$(C_{L_{max}})_{WB}$		Wing-body maximum lift	7
21		$(\alpha_{C_{L_{max}}})_{WB}$		Wing-body angle of attack of max lift	7
22				WB(20)*B(44)	7
23				WB(21)*B(43)	7
24-39		UNUSED			

SUBSONIC WING-BODY-TAIL PARAMETERS

VARIABLE DEFINITION OF DATA BLOCK "WBT"

LOCATION	VARIABLE NAME	ENGINEERING SYMBOL	DATCOM REFERENCE	COMMENTS/DEFINITIONS	OVERLAY
1		$K_{H(B)}$		Interference factor for H.T. in presence of body	10
2		$K_{B(H)}$		Interference factor for body in presence of H.T.	10
3		$(C_{L_\alpha})_{H(B)}$		H.T. lift curve slope in presence of body	10
4		$(C_{L_\alpha})_{B(H)}$		Body lift curve slope in presence of H.T.	10
5		UNUSED			
6-25		$(C_{L_H})'_J$			10
26-45		$(\Delta C_{L_T})_J$		Eqn. 4.5.1.2-b, third term	10
46-65		$(\Gamma/2\pi\alpha vr)_J$		Non-dimensional vortex strength of tail	10
66		$(C_{D_o})_{VTA}$		VERTICAL & VENTRAL C_{D_0}	10
67		$(C_{D_o})_{WBHV}$			10
68-87		$I_{VB(H)}$		Interference factor for body on H.T.	10
88-107		$(C_{m_\alpha})_T$			10
108		r_H			10
109		$(X_H)_{\bar{c}/4}$			10
110-129		$(C_{L_{TB}})_J$		Lift of tail in presence of body	10
130-149		$[C_{L_{VB(H)}}]_J$		Effect of body vortices on tail lift	10
150	AKHBI				10
151	AKBHI				10
152-155		UNUSED			

WING INPUT VARIABLES

VARIABLE DEFINITION OF DATA BLOCK "WGIN"

LOCATION	VARIABLE NAME	ENGINEERING SYMBOL	DATCOM REFERENCE	COMMENTS/DEFINITIONS	OVERLAY
1	CHRDTP	C_t		Input via NAMELIST WGPLNF	
2	SSPNØP	$b_o^*/2$			
3	SSPNE	$b^*/2$			
4	SSPN	$b/2$			
5	CHRDBP	C_b			
6	CHRDR	C_r			
7	SAVSI	$(\Lambda_{X/C})_I$			
8	SAVSØ	$(\Lambda_{X/C})_Ø$			
9	CHSTAT	X/C			
10		UNUSED			
11	TWISTA	θ			
12	SSPNDD	$(b/2)_{\Gamma_o}$			
13	DHDADI	Γ_I			
14	DHDADØ	$\Gamma_Ø$			
15	TYPE				
16	TØVC	t/c		Input via NAMELIST WGSCHR	
17	DELTAY	ΔY			
18	XØVC	$(X/C)_{max}$			
19	CLI	C_{ℓ_i}			
20	ALPHAI	α_i			
21-40	CLALPA	C_{ℓ_α}			
41-60	CLMAX	$C_{\ell_{max}}$			
61	CMØ	$C_{m_Ø}$			
62	LERI	$(R_{LE})_I$			
63	LERØ	$(R_{LE})_Ø$			
64	CAMBER				
65	TØVCØ	$(t/c)_Ø$			
66	XØVCØ	$(X/C)_{max_o}$			
67	CMØT	$(C_{m_o})_Ø$			
68	CLMAXL	$(C_{\ell_{max}})_{M=0}$			
69	CLAMØ	$(C_{\ell_\alpha})_{M=0}$			

VARIABLE DEFINITION OF DATA BLOCK "WGIN"

LOCATION	VARIABLE NAME	ENGINEERING SYMBOL	DATCOM REFERENCE	COMMENTS/DEFINITIONS	OVERLAY
70	TCEFF	$(t/c)_{Eff}$		Input via NAMELIST WGSCHR	
71	KSHARP	K			
72-91	XAC	X_{ac}			
92	ARCL				
93	YCM	$(Y/C)_{max}$			
94	CLD	$(C_L)_{Design}$ (Transonic)			
95-100	SLØPE	δ_h			
101	DWASH				

GROUP II INPUTS (continued)

	1-10	11-20	21-30	31-40	41-50	51-60	61-70	71-80
	$HTSCHR							
MAXIMUM THICKNESS (INBOARD PANEL)	TØVC=							
DIFFERENCE IN ORDINATES AT 6.00% AND 0.15% CHORD	DELTAY=							
CHORD LOCATION AT MAXIMUM THICKNESS (INBOARD PANEL)	XØVC=							
DESIGN LIFT COEFFICIENT	CLI=							
ANGLE OF ATTACK AT DESIGN LIFT COEFFICIENT	ALPHAI=							
SECTION LIFT-CURVE-SLOPE (NMACH VALUES)	CALPA(1)=							
SECTION MAXIMUM LIFT COEFFICIENT (NMACH VALUES)	CLMAX(1)=							
SECTION ZERO LIFT PITCHING MOMENT COEFFICIENT (INBOARD)	CMØ=							
LEADING EDGE RADIUS (INBOARD PANEL)	LERI=							
LEADING EDGE RADIUS (OUTBOARD PANEL)	LERØ=							
.TRUE. IF CAMBERED AIRFOIL	CAMBER=							
MAXIMUM THICKNESS (OUTBOARD PANEL)	TØVCØ=							
CHORD LOCATION AT MAXIMUM THICKNESS (OUTBOARD PANEL)	XØVCØ=							
SECTION ZERO LIFT PITCHING MOMENT COEFFICIENT (OUTBOARD)	CMØT=							
SECTION LIFT-CURVE-SLOPE AT MACH EQUALS ZERO	CLAMØ=							
PLANFORM EFFECTIVE THICKNESS RATIO	TCEFF=							
SHARP-NOSED AIRFOILS WAVE-DRAG FACTOR	KSHARP=							
ASPECT RATIO CLASSIFICATION FACTOR	ARCL=							
SECTION AERODYNAMIC CENTER	XAC(1)=							
MAXIMUM AIRFOIL CAMBER	YCM=							
CONICAL CAMBER DESIGN LIFT COEFFICIENT	CLD=							
TYPE OF AIRFOIL COORDINATES: (1) COORDINATES (2) MEAN & THICK	TYPEIN=							
NUMBER OF SECTION INPUT POINTS (50 MAX)	NPTS=							
ABSCISSAS OF INPUT POINTS (NPTS VALUES)	XCØRD(1)=0..,							
UPPER SURFACE ORDINATES (NPTS VALUES)	YUPPER(1)=0..,							
LOWER SURFACE ORDAINTES (NPTS VALUES)	YLØWER(1)=0..,							
MEAN LINE ORDINATES (NPTS VALUES)	MEAN(1)=0..,							
THICKNESS DISTRIBUTION ORDINATES (NPTS VALUES)	THICK(1)=0..,							
	$END							

NOTES: Leave Unused Columns Blank

All inputs require decimal point, either -X.XXX or -X.XXE-YY.

Refer to users manual (Volume I) for complete description of all variables.

Column 1 must be blank. See Appendix B of Volume I for namelist coding rules.

GROUP II INPUTS (continued)

	1-10	11-20	21-30	31-40	41-50	51-60	61-70	71-80
	$VTSCHR							
MAXIMUM THICKNESS (INBOARD PANEL)	TØVC=							
CHORD LOCATION AT MAXIMUM THICKNESS (INBOARD PANEL)	XØVC=							
SECTION LIFT-CURVE-SLOPE (NMACH VALUES)	CLALPA(1)=							
LEADING EDGE RADIUS (INBOARD PANEL)	LERI=							
LEADING EDGE RADIUS (OUTBOARD PANEL)	LERØ=							
MAXIMUM THICKNESS (OUTBOARD PANEL)	TØVCØ=							
CHORD LOCATION AT MAXIMUM THICKNESS (OUTBOARD PANEL)	XØVCØ=							
PLANFORM EFFECTIVE THICKNESS RATIO	TCEFF=							
SHARP-NOSED AIRFOILS WAVE-DRAG FACTOR	KSHARP=							
ASPECT RATIO CLASSIFICATION FACTOR	ARCL=							
TYPE OF AIRFOIL COORDINATES: (1) COORDINATES (2) MEAN & THICK	TYPEIN=							
NUMBER OF SECTION INPUT POINTS (50 MAX)	NPTS=							
ABSCISSAS OF INPUT POINTS (NPTS VALUES)	XCØRD(1)=0.,							
UPPER SURFACE ORDINATES (NPTS VALUES)	YUPPER(1)=0.,							
LOWER SURFACE ORDINATES (NPTS VALUES)	YLØWER(1)=0.,							
MEAN LINE ORDINATES (NPTS VALUES)	MEAN(1)=0.,							
THICKNESS DISTRIBUTION ORDINATES (NPTS VALUES)	THICK(1)=0.,							
	$END							

NOTES: Leave Unused Columns Blank

All inputs require decimal point, either -X.XXX or -X.XXE-YY.

Refer to users manual (Volume I) for complete description of all variables.

Column 1 must be blank. See Appendix B of Volume I for namelist coding rules.

GROUP II INPUTS (continued)

	1-10	11-20	21-30	31-40	41-50	51-60	61-70	71-80
	$VFSCHR							
MAXIMUM THICKNESS (INBOARD PANEL)	TØVC=							
CHORD LOCATION AT MAXIMUM THICKNESS (INBOARD PANEL)	XØVC=							
SECTION LEFT-CURVE-SLOPE (NMACH VALUES)	CLALPA(1)=							
LEADING EDGE RADIUS (INBOARD PANEL)	LERI=							
LEADING EDGE RADIUS (OUTBOARD PANEL)	LERØ=							
MAXIMUM THICKNESS (OUTBOARD PANEL)	TØVCØ=							
CHORD LOCATION AT MAXIMUM THICKNESS (OUTBOARD PANEL)	XØVCØ=							
PLANFORM EFFECTIVE THICKNESS RATIO	TCEFF=							
SHARP-NOSED AIRFOILS WAVE-DRAG FACTOR	KSHARP=							
ASPECT RATIO CLASSIFICATION FACTOR	ARCL=							
TYPE OF AIRFOIL COORDINATES: (1) COORDINATES (2) MEAN & THICK	TYPEIN=							
NUMBER OF SECTION INPUT POINTS (50 MAX)	NPTS=							
ABSCISSAS OF INPUT POINTS (NPTS VALUES)	XCØRD(1)=0.,							
UPPER SURFACE ORDINATES (NPTS VALUES)	YUPPER(1)=0.,							
LOWER SURFACE ORDINATES (NPTS VALUES)	YLØWER(1)=0.,							
MEAN LINE ORDINATES (NPTS VALUES)	MEAN(1)=0.,							
THICKNESS DISTRIBUTION ORDINATES (NPTS VALUES)	THICK(1)=0.,							
	$END							

NOTES: Leave Unused Columns Blank

All inputs require decimal point, either -X.XXX or -X.XXE-YY.

Refer to users manual (Volume I) for complete description of all variables.

Column 1 must be blank. See Appendix B of Volume I for namelist coding rules.

GROUP II INPUTS (continued)

MACH SEQUENCE IN COLUMNS 7 AND 8

BODY C_{L_α} VS. α

BODY C_{m_α} VS. α

BODY C_D VS. α

BODY C_L VS. α

BODY C_m VS. α

WING C_{L_α} VS. α

WING C_{m_α} VS. α

WING C_D VS. α

WING C_L VS. α

WING C_m VS. α

H.T. C_{L_α} VS. α

H.T. C_{m_α} VS. α

H.T. C_D VS. α

H.T. C_L VS. α

H.T. C_m VS. α

VERTICAL TAIL C_{D_o}

WING-BODY C_{L_α} VS. α

WING-BODY C_{m_α} VS. α

WING-BODY C_D VS. α

WING-BODY C_L VS. α

1-10	11-20	21-30	31-40	41-50	51-60	61-70	71-80
1 2 3 4 5 6 7 8 9 0	1 2 3 4 5 6 7 8 9 0	1 2 3 4 5 6 7 8 9 0	1 2 3 4 5 6 7 8 9 0	1 2 3 4 5 6 7 8 9 0	1 2 3 4 5 6 7 8 9 0	1 2 3 4 5 6 7 8 9 0	1 2 3 4 5 6 7 8 9 0
$EXPR							
CLAB(1)=							
CMAB(1)=							
CDB(1)=							
CLB(1)=							
CMB(1)=							
CLAW(1)=							
CMAW(1)=							
CDW(1)=							
CLW(1)=							
CMW(1)=							
CLAH(1)=							
CMAH(1)=							
CDH(1)=							
CLH(1)=							
CMH(1)=							
CDV=							
CLAWB(1)=							
CMAWB(1)=							
CDWB(1)=							
CLWB(1)=							

NOTES: Leave Unused Columns Blank

All inputs require decimal point, either -X.XXX or -X.XXE-YY.

Refer to users manual (Volume I) for complete description of all variables.

Column 1 must be blank. See Appendix B of Volume I for namelist coding rules.

GROUP II INPUTS (EXPR--, continued)

WING BODY C_m VS α

$\partial\epsilon/\partial\alpha$ VS. α

ϵ VS. α

q_H/q_∞ VS. α

WING α_0
WING α_*
WING $\alpha C_{L_{MAX}}$
WING $C_{L_{MAX}}$
H.T. α_0
H.T. α_*
H.T. $\alpha C_{L_{MAX}}$
H.T. $C_{L_{MAX}}$

1-10	11-20	21-30	31-40	41-50	51-60	61-70	71-80
1 2 3 4 5 6 7 8 9 0	1 2 3 4 5 6 7 8 9 0	1 2 3 4 5 6 7 8 9 0	1 2 3 4 5 6 7 8 9 0	1 2 3 4 5 6 7 8 9 0	1 2 3 4 5 6 7 8 9 0	1 2 3 4 5 6 7 8 9 0	1 2 3 4 5 6 7 8 9 0

```
 CMWB(1)=
 DEØDA(1)=
 EPSLØN(1)=
 QØQINF(1)=
 ALPØW=
 ALPLW=
 ACLMW=
 CLMW=
 ALPØH=
 ALPLH=
 ACLMH=
 CLMH=
$END
```

NOTES: Leave Unused Columns Blank

All inputs require decimal point, either -X.XXX or -X.XXE-YY.

Refer to users manual (Volume I) for complete description of all variables.

Column 1 must be blank. See Appendix B of Volume I for namelist coding rules.

GROUP III INPUTS

	1-10	11-20	21-30	31-40	41-50	51-60	61-70	71-80
	$PRØPWR							
ENGINE THRUST AXIS INCIDNECE	AIETLP=							
NUMBER OF ENGINES	NENGSP=							
THRUST COEFFICIENT	THSTCP=							
AXIAL LOCATION OF PROPELLOR HUB	PHALØC=							
VERTICAL LOCATION OF PROPELLOR HUB	PHVLØC=							
PROPELLOR RADIUS	PRPRAD=							
EMPIRICAL NORMAL FORCE FACTOR	ENGFCT=							
BLADE WIDTH AT 0.3 PROPELLOR RADIUS	BWAPR3=							
BLADE WIDTH AT 0.6 PROPELLOR RADIUS	BWAPR6=							
BLADE WIDTH AT 0.9 PROPELLOR RADIUS	BWAPR9=							
NUMBER OF PROPELLOR BLADES (PER ENGINE)	NØPBPE=							
BLADE ANGLE AT 0.75 PROPELLOR RADIUS	BAPR75=							
LATERAL LOCATION OF ENGINE	YP=							
.TRUE. FOR COUNTER-ROTATING PROPELLOR (COUNTER-CLOCKWISE)	CRØT=							
	$END							
	$JETPWE							
ENGINE THRUST LINE INCIDENCE	AIETLJ=							
NUMBER OF ENGINES	NENGSJ=							
THRUST COEFFICIENT	THSTCJ=							
AXIAL LOCATION OF INLET	JIALØC=							
VERTICAL LOCATION OF EXIT	JEVLØC=							
AXIAL LOCATION OF EXIT	JEALØC=							
INLET AREA	JINLTA=							
EXIT ANGLE	JEANGL=							
EXIT VELOCITY	JEVELØ=							
AMBIENT TEMPERATURE	AMBTMP=							
EXIT STATIC TEMPERATURE	JESTMP=							
LATERAL LOCATION OF ENGINE	JELLØC=							
EXIT TOTAL PRESSURE	JETØTP=							
AMBIENT STATIC PRESSURE	AMBSTP=							
EXIT RADIUS	JERAD=							
	$END							

NOTES: Leave Unused Columns Blank

All inputs require decimal point, either -X.XXX or -X.XXE-YY.

Refer to users manual (Volume I) for complete description of all variables.

Column 1 must be blank. See Appendix B of Volume I for namelist coding rules.

GROUP III INPUTS (continued)

	1-10	11-20	21-30	31-40	41-50	51-60	61-70	71-80
	1 2 3 4 5 6 7 8 9 0	1 2 3 4 5 6 7 8 9 0	1 2 3 4 5 6 7 8 9 0	1 2 3 4 5 6 7 8 9 0	1 2 3 4 5 6 7 8 9 0	1 2 3 4 5 6 7 8 9 0	1 2 3 4 5 6 7 8 9 0	1 2 3 4 5 6 7 8 9 0
	$GRNDEF							
NUMBER OF GROUND HEIGHTS TO RUN	NGH=							
GROUND HEIGHTS (NGH VALUES)	GRDHT(1,)=							
	$END							
	$TVTPAN							
VERTICAL PANEL SPAN ABOVE LIFTING SURFACE	BVP=							
VERTICAL PANEL SPAN	BV=							
FUSELAGE DEPTH AT VERTICAL PANEL 0.25 MAC	BDV=							
DISTANCE BETWEEN VERTICAL PANELS	BH=							
PLANFORM AREA OF ONE VERTICAL PANEL	SV=							
TRAILING EDGE ANGLE OF VERTICAL PANEL SECTION	VPHITE=							
LONGITUDINAL DISTANCE FROM C.G. TO 0.25 MAC	VLP=							
VERTICAL DISTANCE FROM C.G. TO 0.25 MAC	ZP=							
	$END							
	$LARWB							
VERTICAL DISTANCE FROM BASE CENTROID TO REFERENCE PLANE	ZB=							
PLANFORM AREA (USED AS REFERENCE AREA)	SREF=							
EFFECTIVE WEDGE ANGLE (SHARP LEADING EDGE)	DELTEP=							
PROJECTED FRONTAL AREA	SFRØNT=							
SURFACE ASPECT AREA	AR=							
ROUND LEADING EDGE PARAMETER	R3LEØB=							
ROUND LEADING EDGE PARAMETER	DELTAL=							
BODY LENGTH (USED AS LONGITUDINAL REFERENCE LENGTH)	L=							
WETTED AREA EXCLUDING BASE AREA	SWET=							
BASE PERIMETER	PERBAS=							
BASE AREA	SBASE=							
BASE MAXIMUM HEIGHT	HB=							
BASE SPAN (USED AS LATERAL REFERENCE LENGTH)	BB=							
.TRUE. FOR PORTIONS OF BASE AFT OF NON-LIFTING SURFACE	BLF=							
LONGITUDINAL LOCATION OF C.G.	XCG=							
WING SEMI-APEX ANGLE	THETAD=							
.TRUE. FOR ROUNDED NOSE	RØUNDN=							
CONFIGURATION PROJECTED SIDE AREA	SBS=							
PROJECTED SIDE AREA FORWARD OF 0.2 BODY LENGTH	SBSLB=							
LONGITUDINAL DISTANCE FROM NOSE TO CENTROID OF SBS	XCENSB=							
LONGITUDINAL DISTANCE FROM NOSE TO CENTROID OF PLANFORM AREA	XCENW=							
	$END							

NOTES: Leave Unused Columns Blank

All inputs require decimal point, either -X.XXX or -X.XXE-YY.

Refer to users manual (Volume) for complete description of all variables.

Column 1 must be blank. See Appendix B of Volume I for namelist coding rules.

GROUP III INPUTS (continued)

CONTROL SURFACE TYPE	FTYPE=
NUMBER OF DEFLECTION ANGLES, 9 MAX	NDELTA=
DEFLECTION ANGLES (NDELTA VALUES)	DELTA(1)=
TANGENT OF AIRFOIL T.E. AT 90% AND 99% CHORD	PHETE=
TANGENT OF AIRFOIL T.E. AT 95% AND 99% CHORD	PHETEP=
FLAP CHORD (INBOARD END)	CHRDFI=
FLAP CHORD (OUTBOARD END)	CHRDFØ=
SPAN LOCATION OF INBOARD FLAP END	SPANFI=
SPAN LOCATION OF OUTBOARD FLAP END	SPANFØ=
WING CHORD AT INBOARD FLAP END (NDELTA VALUES)	CPRMEI(1)=
WING CHORD AT OUTBOARD FLAP END (NDELTA VALUES)	CPRMEØ(1)=
	CAPINB(1)=
	CAPØUT(1)=
	DØBDEF(1)=
	DØBCIN=
	DØBCØT=
INCREMENTAL SECTION LIFT DUE TO FLAP DEFLECTION	SCLD(1)=
INCREMENTAL SECTION PITCHING MOMENT DUE TO FLAP DEFLECTION	SCMD(1)=
AVERAGE CHORD OF BALANCE	CB=
AVERAGE THICKNESS OF CONTROL AT HINGE LINE	TC=
FLAP NOSE SHADE: (1) ROUND (2) ELLIPTICAL (3) SHARP	NTYPE=
TYPE OF JET FLAP: (1) PURE JET (2) IBF (3) EBF (4) COMB	JETFLP=
TWO DIMENSIONAL JET EFFLUX COEFFICIENT	CMU=
JET DEFLECTION ANGLES (NDELTA VALUES)	DELJET(1)=
EBF EFFECTIVE JET DEFLECTION ANGLES (NDELTA VALUES)	EFFJET(1)=

$SYMFLP

$END

NOTES: Leave Unused Columns Blank

All inputs require decimal point, either -X.XXX or -X.XXE-YY.

Refer to users manual (Volume I) for complete description of all variables.

Column 1 must be blank. See Appendix B of Volume I for namelist coding rules.

GROUP III INPUTS (continued)

CONTROL SURFACE TYPE	STYPE=
NUMBER OF CONTROL DEFLECTIONS, 9 MAX	NDELTA=
SPAN LOCATION OF INBOARD END OF CONTROL SURFACE	SPANFI=
SPAN LOCATION OF OURBOARD END OF CONTROL SURFACE	SPANFØ=
TANGENT OF AIRFOIL T.E. AT 90% AND 99% CHORD	PHETE=
LEFT HAND CONTROL DEFLECTION ANGLES (NDELTA VALUES)	DELTAL(1)=
RIGHT HAND CONTROL DEFLECTION ANGLES (NDELTA VALUES)	DELTAR(1)=
AILERON CHORD AT INBOARD FLAP STATION	CHRDFI=
AILERON CHORD AT OUTBOARD FLAP STATION	CHRDFØ=
RPOJECTED HEIGHT OF DEFLECTOR (NDELTA VALUES)	DELTAD(1)=
PROJECTED HEIGHT OF SPOILER (NDELTA VALUES)	DELTAS(1)=
DISTANCE FROM WING L.E. TO SPOILER LIP (NDELTA VALUES)	XSØC(1)=
DISTANCE FROM WING L.E. TO SPOILER HINGE LINE	XSPRME=
PROJECTED SPOILER HEIGHT	HSØC(1)=

1-10 11-20 21-30 31-40 41-50 51-60 61-70 71-80

$ASYFLP

$END

NOTES: Leave Unused Columns Blank

All inputs require decimal point, either -X.XXX or -X.XXE-YY.

Refer to users manual (Volume I) for complete description of all variables.

Column 1 must be blank. See Appendix B of Volume I for namelist coding rules.

GROUP III INPUTS (continued)

CONTROL TAB TYPE: (1) TAB (2) TRIM (3) BOTH
CONTROL TAB INBOARD CHORD
CONTROL TAB OUTBOARD CHORD
SPAN LOCATION OF INBOARD CONTROL TAB END
SPAN LOCATION OF OUTBOARD CONTROL TAB END
TRIM TAB INBOARD CHORD
TRIM TAB OUTBOARD CHORD
SPAN LOCATION OF INBOARD TRIM TAP END
SPAN LOCATION OF OUTBOARD TRIM TAB END
$C_{h\delta}$ CONTROL SURFACE
$C_{h\alpha}$ CONTROL SURFACE
$C_{h\delta}$
$C_{h\alpha}$ TRIM TAB
$C_{h\delta}$ TRIM TAB
MAXIMUM STICK GEARING
TAB SPRING EFFECTIVENESS
AERODYNAMIC BOOST LINK RATIO
CONTROL TAB GEAR RATIO
$-\delta_{tc_{max}} / \delta_{c_{max}}$

1-10	11-20	21-30	31-40	41-50	51-60	61-70	71-80
1 2 3 4 5 6 7 8 9 0	1 2 3 4 5 6 7 8 9 0	1 2 3 4 5 6 7 8 9 0	1 2 3 4 5 6 7 8 9 0	1 2 3 4 5 6 7 8 9 0	1 2 3 4 5 6 7 8 9 0	1 2 3 4 5 6 7 8 9 0	1 2 3 4 5 6 7 8 9 0
$CØNTAB							
TTYPE=							
CFITC=							
CFØTC=							
BITC=							
BØTC=							
CFITT=							
CFØTT=							
BITT=							
BØTT=							
B1=							
B2=							
B3=							
B4=							
D1=							
D2=							
D3=							
GCMAX=							
KS=							
RL=							
BGR=							
DELR=							
$END							

NOTES: Leave Unused Columns Blank

All inputs require decimal point, either -X.XXX or -X.XXE-YY.

Refer to users manual (Volume I) for complete description of all variables.

Column 1 must be blank. See Appendix B of Volume I for namelist coding rules.

GROUP IV INPUTS

PRINT NAMELIST INPUTS	NAMELIST
SAVE CASE DATA FOR NEXT CASE	SAVE
SYSTEM OF UNITS (EX. DIM M)	DIM
COMPUTE TRIM CHARACTERISTICS	TRIM
COMPUTE DYNAMIC DERIVATIVES	DAMP
DEFINE WING DESIGNATION	NACA-W-
DEFINE H.T. DESIGNATION	NACA-H-
DEFINE V.T. DESIGNATION	NACA-V-
DEFINE V.F. DESIGNATION	NACA-F-
CASE TITLE (EX. CASEID CASE 1)	CASEID
DUMP COMPUTATIONAL DATA ARRAYS (EX. DUMP A, B)	DUMP
DERIVATIVE ANGULAR UNITS (EX. DERIV RAD)	DERIV
PRINT PARTIAL OUTPUT	PART
COMPUTE CONFIGURATION BUILD-UP	BUILD
STORE SELECTED PARAMETERS FOR PLOTTING	PLØT
END OF CASE INPUTS	NEXT CASE

1-10	11-20	21-30	31-40	41-50	51-60	61-70	71-80
1 2 3 4 5 6 7 8 9 0	1 2 3 4 5 6 7 8 9 0	1 2 3 4 5 6 7 8 9 0	1 2 3 4 5 6 7 8 9 0	1 2 3 4 5 6 7 8 9 0	1 2 3 4 5 6 7 8 9 0	1 2 3 4 5 6 7 8 9 0	1 2 3 4 5 6 7 8 9 0

NOTES: Leave Unused Columns Blank

ALL CONTROL CARDS START IN COLUMN ONE
BLANKS MAY NOT APPEAR IN CONTROL CARD NAMES EXCEPT WHERE SPECIFIED
SEE SECTION 3.5 OF VOLUME I FOR DESCRIPTION OF ALL CONTROL CARDS

REFERENCES

1. McDonnell Douglas Corp.: USAF Stability and Control Datcom. Air Force Flight Dyn. Lab., U.S. Air Force, Oct. 1960. (Revised April 1976).
2. Weber, J.: The Calculation of the Pressure Distribution Over the Surface of Two-Dimensional and Swept Wings with Symmetrical Aerofoil Sections. ARC R&M 2918, 1953.
3. Weber, J.: The Calculation of the Pressure Distribution on the Surface of Thick Cambered Wings and the Design of Wings with Given Pressure Distribution. ARC R&M 3026, 1955.
4. Powell, B. J.: The Calculation of the Pressure Distribution on a Thick Cambered Aerofoil at Subsonic Speeds Including the Effects of the Boundary Layer. NPL Aero Report 1238, 1967.
5. Kinsey, D. W. and Bowers, D. L.: A Computerized Procedure to Obtain Coordinates and Section Characteristics of NACA Designated Airfoils. AFFDL-TR-71-87, November 1971.
6. Niedling, L. G.: A Computer Program for the Prediction of Airfoil Characteristics in Subsonic and Transonic Flow. McDonnell Douglas Aircraft Company, Transonic Wing Design No. 8, 1969.
7. Abbott, I. H.; von Doenhoff, A. E.; and Stivers, L. S., Jr.: Summary of Airfoil Data. NACA TR-824, 1945.

☆U.S.Government Printing Office: 1980 — 657-084/703